Western Power's Asset Management System

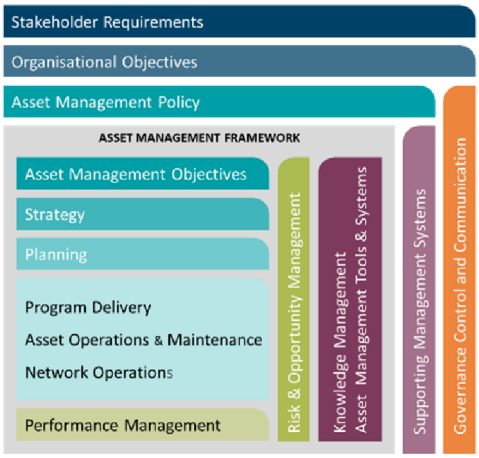

Distribution Design Catalogue Streetlights Section 12 (SL)

Original Issue: June 2004
Content Owner/Custodian: Distribution Design and Standards
This Revision: November 2026
Date for Next Review: April 2028

©Western Power
ABN 18540492861

Uncontrolled document when printed. Printed copy expires one week from print date.
Volt ID ID-005-9423988d2d7b24adc95455fe07e109f6

Document Control

Endorsement Approvals

	Name	Title	Signature and Date
Compiled by	Nory Cerrado	Distribution Draftsperson	Signature on file
Checked by	Chris Omodei	Principal Engineer	Signature on file
Endorsed by	Ken Tiong	Team Leader	Signature on file
Approved by	Pep Ngwenya	Distribution Design & Standards Manager	Signature on file

Record of Revision

Revision No.	Date	Version	Compiled By	Description
1	07/04/2025	EDM 21	Nory Cerrado	First review with new format and 3 yearly review
2	01/12/2025	Volt 23	Nory Cerrado	Refer to Amendment List
3	23/11/2026	Volt 24	Nory Cerrado	Refer to Amendment List

This document gives direction to and influences the following documents.

Document	Title of Document
ALL CHAPTERS	DDC - DISTRIBUTION DESIGN CATALOGUE
ALL CHAPTERS	DCSH - DISTRIBUTION CONSTRUCTION STANDARD HANDBOOK
ALL CHAPTERS	DSPM - DISTRIBUTION SUBSTATION PLANT MANUAL

Stakeholders (people that were consulted when document was updated)

Business Unit / Function
Asset Management - Asset Performance
Asset Management - Safety Environment Quality and Training
Asset Management - Grid Transformation
Asset Operations - Network Operations
Asset Operations - Operational Services
Asset Operations - Customer Connection Services
Business and Customer Service - Customer Service

Notification List (people to be notified when document is updated)

Business Unit / Function
Asset Management - Asset Performance
Asset Management - Safety Environment Quality and Training
Asset Management - Grid Transformation
Asset Operations - Network Operations
Asset Operations - Operational Services
Asset Operations - Customer Connection Services
Business and Customer Service - Customer Service

This document must not be made available to personnel outside Western Power without the prior written approval of Western Power.

Document Classification and Hierarchy

A key requirement of the Western Power Asset Management Policy (AMP) is to develop and maintain an Asset Management System (AMS). This Distribution Substation Plant Manual is defined as a technical document within the AMS document classification and structure and sits within the planning and Program Delivery components of the AMS.

The AMS and the interrelationships between the collection of documents, tools and systems that are used for asset management are described in the AMS document Volt ID ID-005-dc7f342fed83eb7f008777ff0463b876.

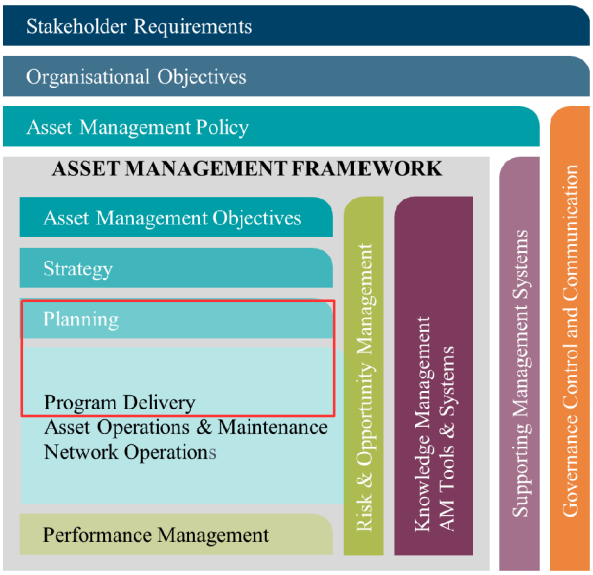

Revision List

For drawing revisions please refer to the DDC Amendment list Volt ID ID-005-8398a186f48cf17cb12618586aa61cb0

©Copyright of Western Power
Any use of this material except in accordance with a written agreement with Western Power is prohibited.

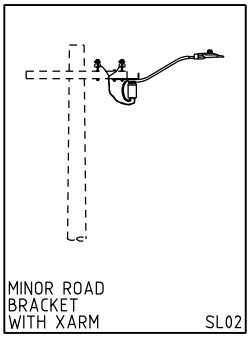
MINOR ROAD
BRACKET
WITH XARM SL02

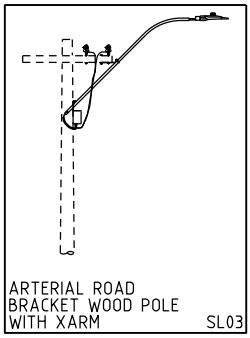
ARTERIAL ROAD
BRACKET WOOD POLE
WITH XARM SL03

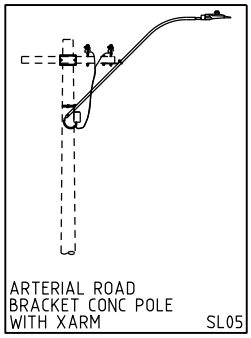
ARTERIAL ROAD
BRACKET CONC POLE
WITH XARM SL05

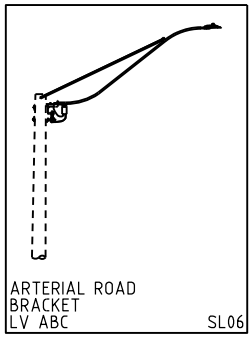
ARTERIAL ROAD
BRACKET
LV ABC SL06

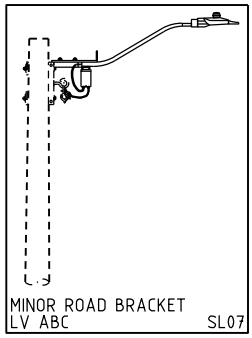
MINOR ROAD BRACKET
LV ABC SL07

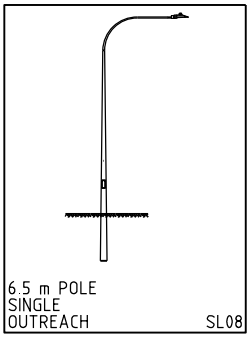
6.5 m POLE
SINGLE
OUTREACH SL08

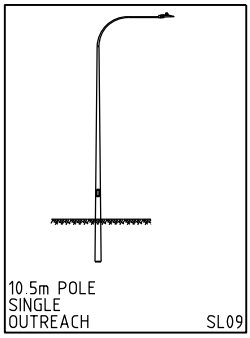
10.5m POLE
SINGLE
OUTREACH SL09

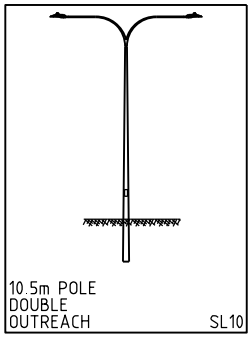
10.5m POLE
DOUBLE
OUTREACH SL10

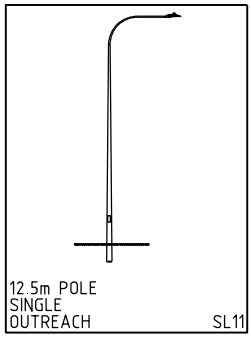
12.5m POLE
SINGLE
OUTREACH SL11

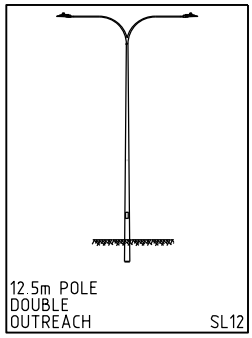
12.5m POLE
DOUBLE
OUTREACH SL12

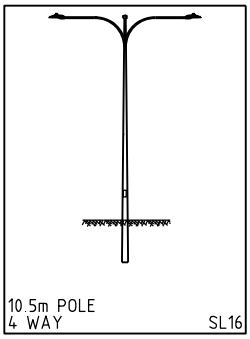
10.5m POLE
4 WAY SL16

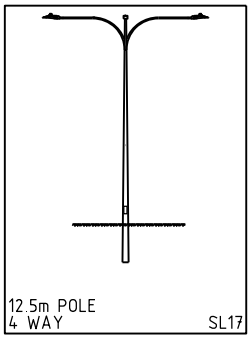
12.5m POLE
4 WAY SL17

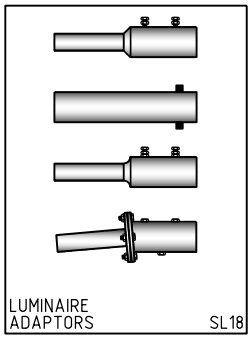
LUMINAIRE
ADAPTORS SL18

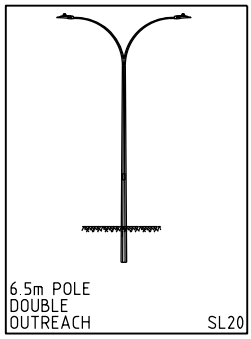
6.5m POLE
DOUBLE
OUTREACH SL20

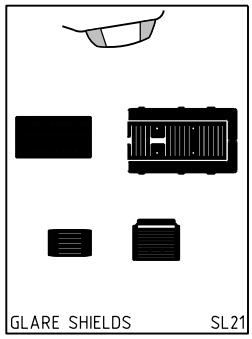
GLARE SHIELDS SL21

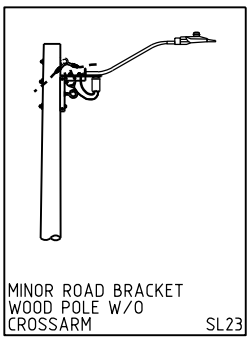
MINOR ROAD BRACKET
WOOD POLE W/O
CROSSARM SL23

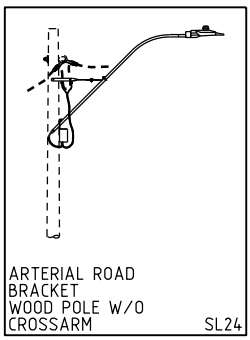
ARTERIAL ROAD
BRACKET
WOOD POLE W/O
CROSSARM SL24

REV.	DATE	DESCRIPTION	ORGD.	CHKD.	APRD.
M	19.11.26	REVISED TO SUIT	ML	VAS	CO
L	17.11.25	REVISED TO SUIT	ML	SL	MM
K	22.06.20	REVISED TO SUIT	CO	REE	GS
J	17.08.18	REVISED TO SUIT LED LUMINARE	REE	CO	GS
H	13.06.13	ORIGINAL ISSUE			

COMPATIBLE UNIT

SL COMPATIBLE UNITS

DISTRIBUTION DESIGN CATALOGUE

westernpower

DRAWN: JRR | DATE: 17-04-2014 | DRG. No.

ORIGINATED: | SCALE: NTS | SL INDEX

CHECKED: REE

APPROVED: GRANT STACY | REV. M | SHT. 1/1

Streetlights LED CU List

CU	CU DESCRIPTION
SL2_S1	Minor road bracket on wood/conc. pole with xarm
SL2_S2	Minor road bracket on wood/conc. pole with xarm
SL2_S3	Minor road bracket on wood/conc. pole with xarm
SL3_S4	Arterial road bracket on wood pole with xarm
SL3_S5	Arterial road bracket on wood pole with xarm
SL3_S6	Arterial road bracket on wood pole with xarm
SL5_S4	Arterial road bracket on concrete pole with xarm
SL5_S5	Arterial road bracket on concrete pole with xarm
SL5_S6	Arterial road bracket on concrete pole with xarm
SL6_S4	Arterial road bracket for LVABC
SL6_S5	Arterial road bracket for LVABC
SL6_S6	Arterial road bracket for LVABC
SL7_S1	Minor road bracket for LVABC
SL7_S2	Minor road bracket for LVABC
SL7_S3	Minor road bracket for LVABC
SL8_S1	Single outreach steel standard 6.5m
SL8_S2	Single outreach steel standard 6.5m
SL9_S3	Single outreach steel standard 10.5m
SL9_S4	Single outreach steel standard 10.5m
SL10_S3	Double outreach steel standard 10.5m
SL10_S4	Double outreach steel standard 10.5m
SL11_S5	Single outreach steel standard 12.5m
SL11_S6	Single outreach steel standard 12.5m
SL12_S5	Double outreach steel standard 12.5m
SL12_S6	Double outreach steel standard 12.5m
SL16_S3	4 Way outreach steel standard 10.5m
SL16_S4	4 Way outreach steel standard 10.5m
SL17_S5	4 Way outreach steel standard 12.5m
SL17_S6	4 Way outreach steel standard 12.5m
SL18_GRACE	Luminaire adaptor for RoadGrace LED (equiv 42W CFL, 125W MH & HPS)
SL18_FLAIR	Luminaire adaptor for RoadFlair LED (equiv 150/250 MH & HPS)
SL18_BOURKE	Luminaire adaptor to fit Bourke Hill Luminaire
SL18_REDUCE	Luminaire adaptor RoadFlair to non-standard Columns
SL20_S1	Double outreach steel standard 6.5m
SL20_S2	Double outreach steel standard 6.5m

Streetlights LED CU List

CU	CU DESCRIPTION
SL21_70B	Glare shield (Back) for 70W & 125W SL
SL21_70FB	Glare shield (Front & Back) for 70W & 125W SL
SL21_GRACE	Glare shield for RoadGrace LED
SL21_FLR_4E	Glare shield (Back) for Roadflair 80W LED and lower
SL21_FLR_5E	Glare shield (Back) for Roadflair 135W to 160W LED
SL21_FLR_6E	Glare shield (Back) for Roadflair 155W to 170W LED
SL21_RFP_BSP	Glare shield (Back) for Roadflair Pro small luminaire
SL21_RFP_BMP	Glare shield (Back) for Roadflair Pro medium luminaire
SL21_RFP_BMV	Glare shield (Back) for Roadflair Pro medium luminaire
SL21_IM_BOF	Glare shield (Back or Front) for IGNIS Mini
SL21_IM_BNF	Glare shield (Back & Front) for IGNIS Mini
SL21_IM_AA	Glare shield (All around) for IGNIS Mini
SL23_S1	Minor road bracket on wood pole without xarm
SL23_S2	Minor road bracket on wood pole without xarm
SL23_S3	Minor road bracket on wood pole without xarm
SL24_S4	Arterial road bracket on wood pole without xarm
SL24_S5	Arterial road bracket on wood pole without xarm
SL24_S6	Arterial road bracket on wood pole without xarm

LIGHTING CATEGORY	TRADITIONAL DESCRIPTION	GEN 1 LED		GEN 2 LED		CURRENT GEN LED		TRADITIONAL DESCRIPTION
		WATT	STOCK CODE	WATT	STOCK CODE	WATT	STOCK CODE	
S1	80W MV 42W CFL 50W MV	20W	HL6300 - 4000K HL6301 - 3000K	16W	HL6600 - 4000K HL6601 - 3000K	15W	HL6700	8m
S2	70W HPS 70W MH	36W	HL6306 - 4000K HL6307 - 3000K	27W	HL6606 - 4000K	29W	HL6803[3]	8m
				28W	HL6607 - 3000K			
S3	125W MV	53W	HL6303 - 4000K HL6304 - 3000K	42W	HL6603 - 4000K	33W	HL6802[3]	8m
				43W	HL6604 - 3000K			
			HL6305 - 3000K	43W	HL6605 - 3000K	33W	HL6801[3]	15m
S4	150W HPS 150W MH	80W	HL6309 - 4000K HL6310 - 3000K	68W	HL6609 - 4000K	59W	HL6704	15m
				70W	HL6610 - 3000K			
S5	250W MH	160W	HL6312 - 4000K HL6313 - 3000K	135W	HL6612 - 4000K	122W	HL6705	15m
				140W	HL6613 - 3000K			
S6	250W HPS	170W	HL6315 - 4000K HL6316 - 3000K	155W	HL6615 - 4000K	143W	HL6707	15m
				165W	HL6616 - 3000K			

NOTES:
1. WP STANDARD COLOUR TEMPERATURE IS 3000K.
2. THE INITIAL 18W LED DOUBLE INSULATED HL6232 LUMINAIRES ARE CLASSIFIED AS S1 LIGHTING CATEGORY.
3. ORANGETEK LUMINAIRES ARE SUPPLIED BY DEFAULT AT 0° TILT. DO NOT ADJUST FROM DEFAULT.

REV.	DATE	DESCRIPTION	ORGD.	CHKD.	APRD.
L	19.11.26	UPDATED TABLE FOR NEWER LED LUMINAIRES	ML	VAS	CO
K	17.11.25	STOCK CODE HL6303 & HL6313 UPDATED	ML	SL	MM
J	17.01.24	TABLE REVISED, LEGEND ADDED & TITLE CHANGED	CB	ML	CO

COMPATIBLE UNIT

STANDARD CLASS II
LED LUMINAIRE
COMPARISON OF STOCK CODES

DISTRIBUTION DESIGN CATALOGUE

westernpower

DRAWN: JRR | DATE: 29-05-2018 | DRG. No. SL-STD
ORIGINATED: REE | SCALE: NTS
CHECKED: JC
APPROVED: GRANT STACY
REV. L | SHT. 1/1

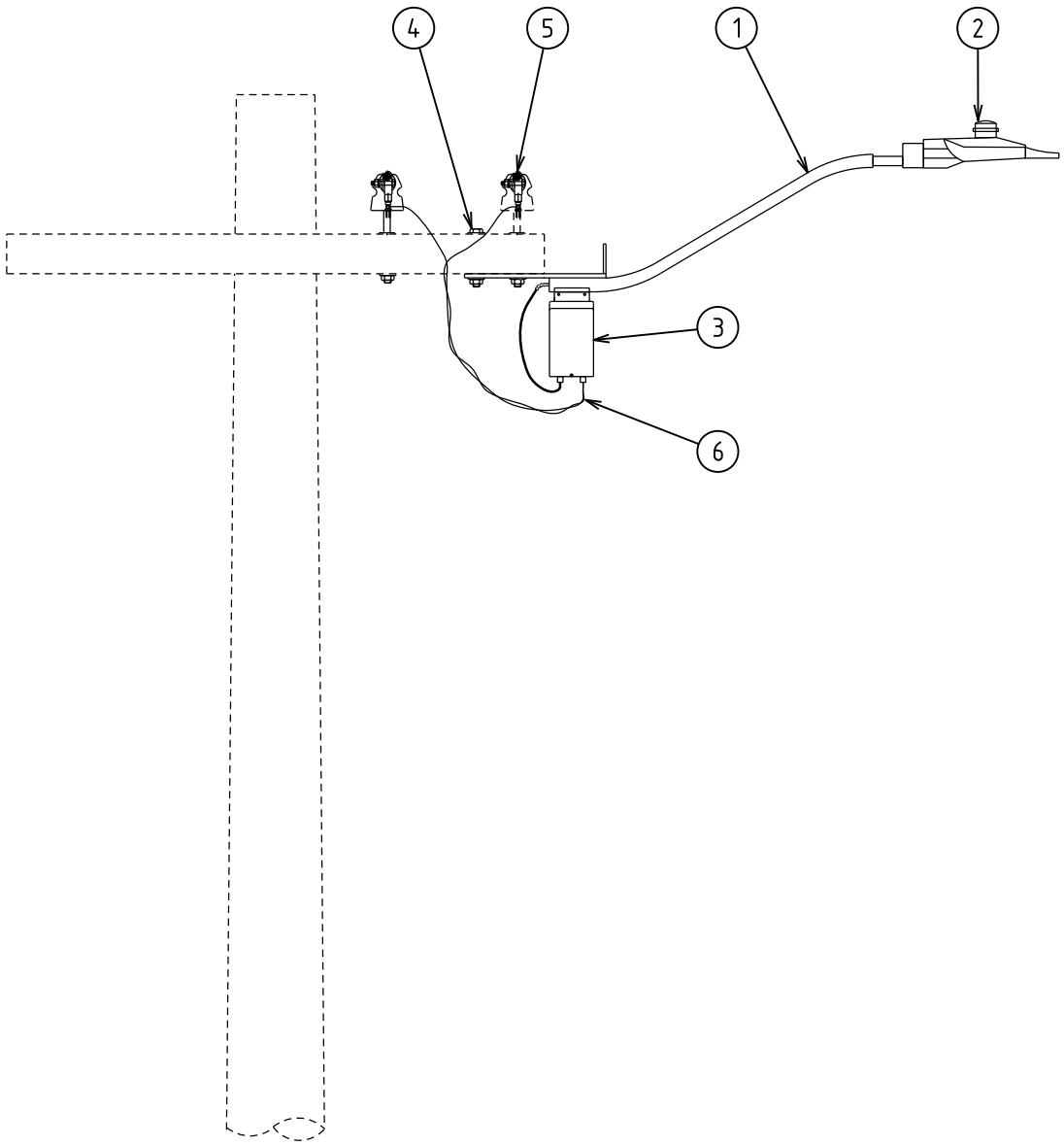

NOTES:
1. IF ARTERIAL LIGHTING IS TO BE FITTED TO MINOR ROAD LAYOUT REFER TO SL18 FOR BRACKETS.
2. REMOVE MINOR ROAD LUMINAIRE AND REPLACE WITH ARTERIAL ROAD LUMINAIRE REQUIREMENT.

REV.	DATE	DESCRIPTION	ORGD.	CHKD.	APRD.
J	19.11.26	UPDATED LED HEAD SHAPE FOR NEW LUMINAIRE RANGE	ML	VAS	CO
H	21.07.21	LED LUMINAIRE MODIFIED	REE	CO	GS
G	17.08.18	LED LUMINAIRE ADDED	REE	JC	FK
F	04.04.12	ORIGINAL ISSUE			

COMPATIBLE UNIT

MINOR ROAD BRACKET WOOD OR CONCRETE POLE WITH CROSSARM

DISTRIBUTION DESIGN CATALOGUE

westernpower

DRAWN: JRR	DATE: 17-04-2014	DRG. No. SL02
ORIGINATED:	SCALE: NTS	
CHECKED: REE		
APPROVED: GRANT STACY		REV. J / SHT. 1/1

CU	CU DESCRIPTION

SL2_S1	Minor road bracket on wood/conc. pole with xarm				
ITEM NUMBER	STOCK CODE	DESCRIPTION	QTY	UNIT OF MEASURE	REMARKS
1	CB0424	Bracket	1		
2	HL6700	15W LED Luminaire with 8m cable	1		
2	HL5557	PE Cell	1		
3	GF1804	Fuse holder with no fuse	1		
3	GF0925	10amp fuse	1		
4	AB4567	12 dia bolt 150 long with nut	1		
5	FC0110	clamp alum. 16mm	2		_FC016* if copper main
6	EE1120	6mm copper xlpe	2	metre	

SL2_S2	Minor road bracket on wood/conc. pole with xarm				
ITEM NUMBER	STOCK CODE	DESCRIPTION	QTY	UNIT OF MEASURE	REMARKS
1	CB0424	Bracket	1		
2	HL6803	29W LED Luminaire with 8m cable	1		
2	HL5557	PE Cell	1		
3	GF1804	Fuse holder with no fuse	1		
3	GF0925	10amp fuse	1		
4	AB4567	12 dia bolt 150 long with nut	1		
5	FC0110	clamp alum. 16mm	2		_FC016* if copper main
6	EE1120	6mm copper xlpe	2	metre	

SL2_S3	Minor road bracket on wood/conc. pole with xarm				
ITEM NUMBER	STOCK CODE	DESCRIPTION	QTY	UNIT OF MEASURE	REMARKS
1	CB0424	Bracket	1		
2	HL6802	33W LED Luminaire with 8m cable	1		
2	HL5557	PE Cell	1		
3	GF1804	Fuse holder with no fuse	1		
3	GF0925	10amp fuse	1		
4	AB4567	12 dia bolt 150 long with nut	1		
5	FC0110	clamp alum. 16mm	2		_FC016* if copper main
6	EE1120	6mm copper xlpe	2	metre	

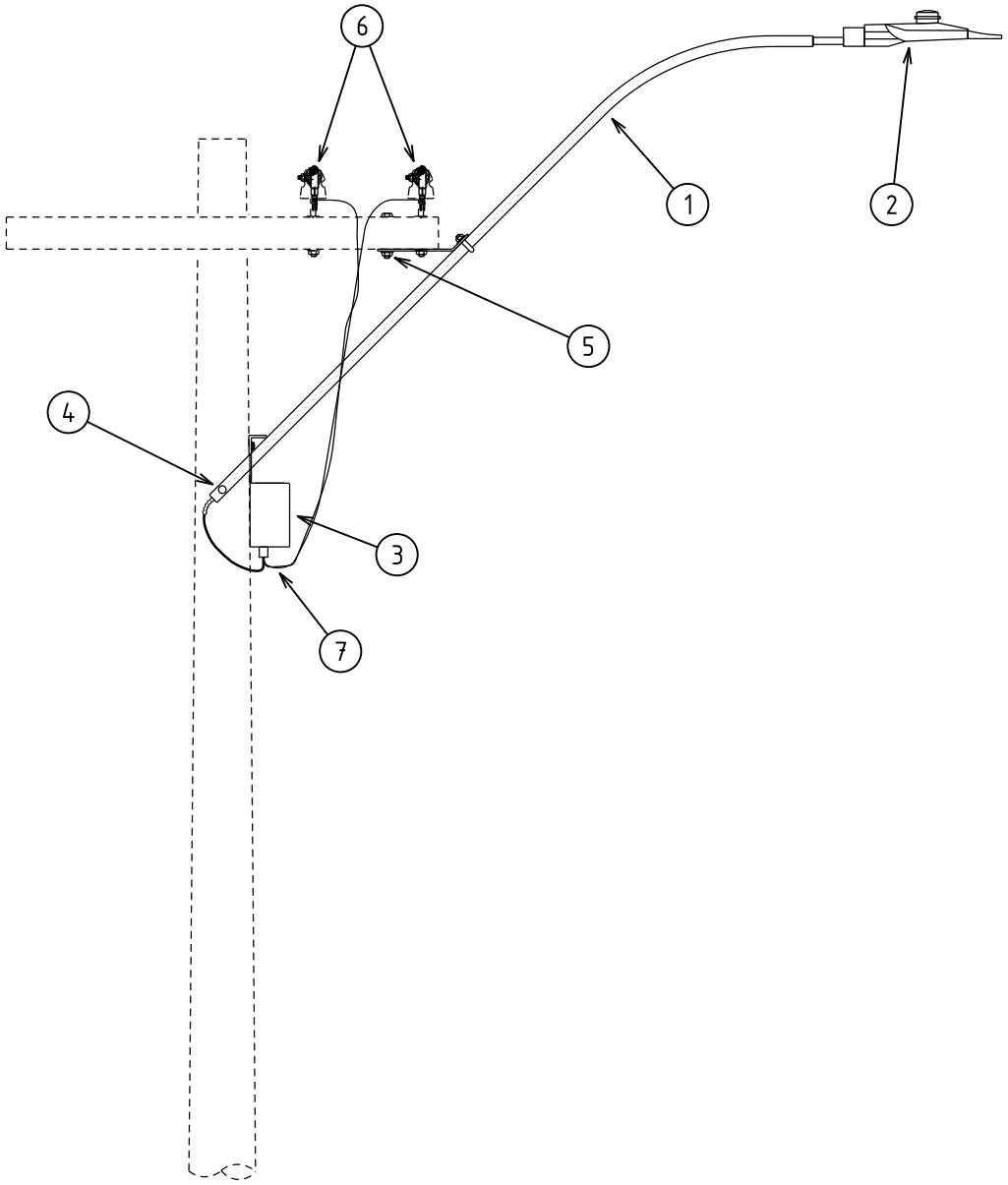

NOTES:
1. IF MINOR ROAD LIGHTING IS TO BE FITTED TO ARTERIAL ROAD LAYOUT REFER TO SL18 FOR BRACKETS.
2. REMOVE ARTERIAL ROAD LUMINAIRE AND REPLACE WITH MINOR ROAD LUMINAIRE REQUIREMENT.

REV.	DATE	DESCRIPTION	ORGD.	CHKD.	APRD.
H	19.11.26	UPDATED LED HEAD SHAPE FOR NEW LUMINAIRE RANGE	ML	VAS	CO
G	17.08.18	LED LUMINAIRE ADDED	REE	JC	FK
F	01.12.09	ORIGINAL ISSUE			

COMPATIBLE UNIT

ARTERIAL ROAD BRACKET WOOD POLE WITH CROSSARM

DISTRIBUTION DESIGN CATALOGUE

westernpower

DRAWN: JRR	DATE: 10-04-2014	DRG. No. SL03
ORIGINATED:	SCALE: NTS	
CHECKED: REE		
APPROVED: GRANT STACY		REV. H / SHT. 1/1

CU	CU DESCRIPTION

SL3_S4	Arterial road bracket on wood pole with xarm				
ITEM NUMBER	STOCK CODE	DESCRIPTION	QTY	UNIT OF MEASURE	REMARKS
1	CB0278	Bracket with nuts and bolts	1		
2	HL6704	59W LED Luminaire with 15m cable	1		
2	HL5557	NEMA base PE Cell	1		
3	GF1804	Fuse holder with no fuse	1		
3	GF0925	10amp fuse	1		
4	AB6736	Pole bolt M12x400	1		Cut to length
5	AB4567	M12x150 bolt with nut	1		
6	FC0110	Clamp alum. 16mm	2		_FC016* if copper main
7	EE1120	6mm copper xlpe	2	metre	

SL3_S5	Arterial road bracket on wood pole with xarm				
ITEM NUMBER	STOCK CODE	DESCRIPTION	QTY	UNIT OF MEASURE	REMARKS
1	CB0278	Bracket with nuts and bolts	1		
2	HL6705	122W LED Luminaire with 15m cable	1		
2	HL5557	NEMA base PE Cell	1		
3	GF1804	Fuse holder with no fuse	1		
3	GF0925	10amp fuse	1		
4	AB6736	Pole bolt M12x400	1		Cut to length
5	AB4567	M12x150 bolt with nut	1		
6	FC0110	Clamp alum. 16mm	2		_FC016* if copper main
7	EE1120	6mm copper xlpe	2	metre	

SL3_S6	Arterial road bracket on wood pole with xarm				
ITEM NUMBER	STOCK CODE	DESCRIPTION	QTY	UNIT OF MEASURE	REMARKS
1	CB0278	Bracket with nuts and bolts	1		
2	HL6707	143W LED Luminaire with 15m cable	1		
2	HL5557	NEMA base PE Cell	1		
3	GF1804	Fuse holder with no fuse	1		
3	GF0925	10amp fuse	1		
4	AB6736	Pole bolt M12x400	1		Cut to length
5	AB4567	M12x150 bolt with nut	1		
6	FC0110	Clamp alum. 16mm	2		_FC016* if copper main
7	EE1120	6mm copper xlpe	2	metre	

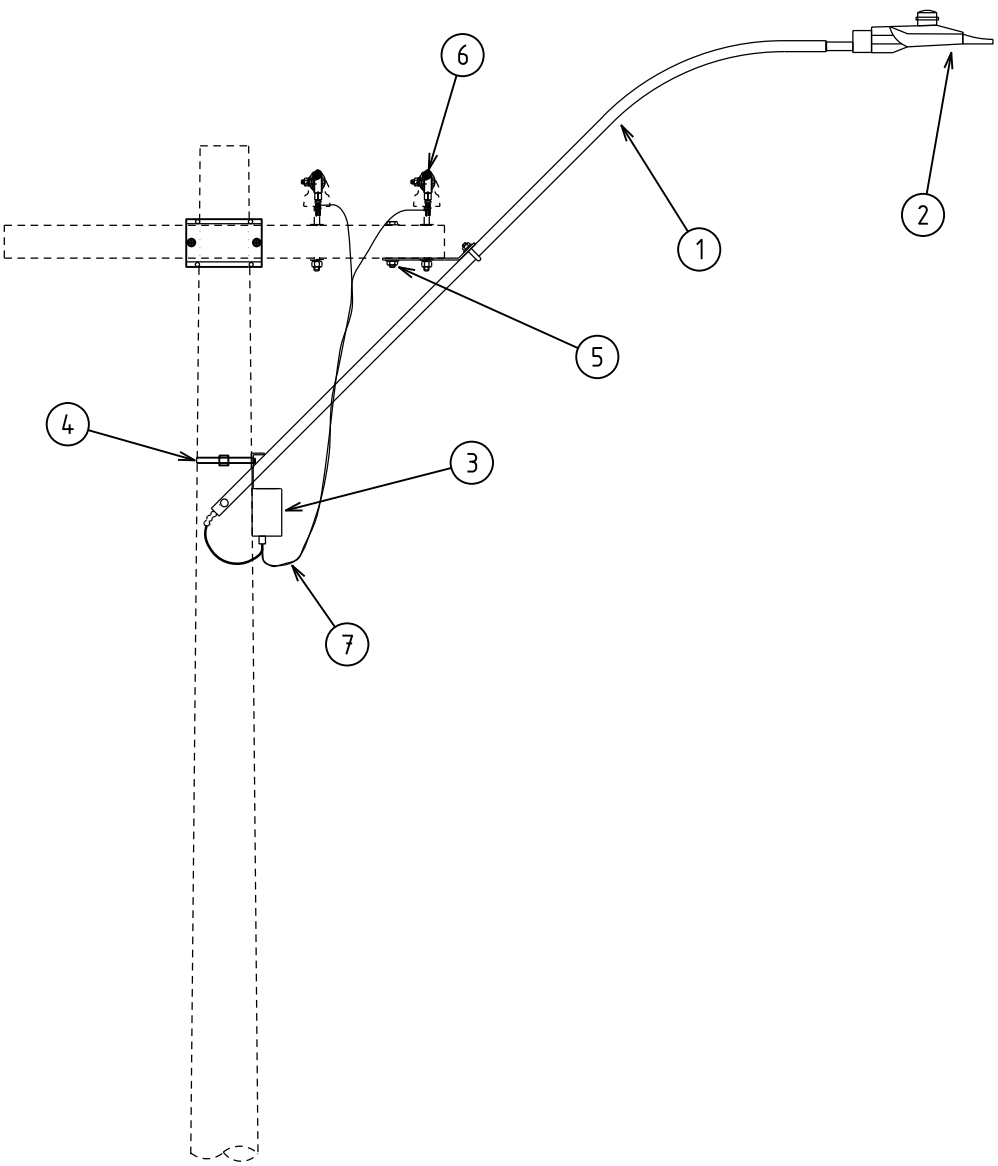

NOTES:
1. IF MINOR ROAD LIGHTING IS TO BE FITTED TO ARTERIAL ROAD LAYOUT REFER TO SL18 FOR BRACKETS.
2. REMOVE ARTERIAL ROAD LUMINAIRE AND REPLACE WITH MINOR ROAD LUMINAIRE REQUIREMENT.

REV.	DATE	DESCRIPTION	ORGD.	CHKD.	APRD
F	19.11.26	UPDATED LED HEAD SHAPE FOR NEW LUMINAIRE RANGE	ML	VAS	CO
E	17.08.18	LED LUMINAIRE ADDED	REE	JC	FK
D	01.12.09	ORIGINAL ISSUE			

COMPATIBLE UNIT

ARTERIAL ROAD BRACKET CONCRETE POLE WITH CROSSARM

DISTRIBUTION DESIGN CATALOGUE

westernpower

DRAWN: JRR	DATE: 10-04-2014	DRG. No. SL05
ORIGINATED:	SCALE: NTS	
CHECKED: REE		
APPROVED: GRANT STACY		REV. F / SHT. 1/1

CU	CU DESCRIPTION

SL5_S4	Arterial road bracket on concrete pole with xarm				
ITEM NUMBER	STOCK CODE	DESCRIPTION	QTY	UNIT OF MEASURE	REMARKS
1	CB0278	Bracket with nuts and bolts	1		
2	HL6704	59W LED Luminaire with 15m cable	1		
2	HL5557	NEMA base PE Cell	1		
3	GF1804	Fuse holder with no fuse	1		
3	GF0925	10amp fuse	1		
4	CB0287	Mounting bracket concrete pole	1		
5	AB4567	12 dia bolt 150 long with nut	1		
6	FC0110	Clamp alum. 16mm	2		_FC016* if copper main
7	EE1120	6mm copper xlpe	2	metre	

SL5_S5	Arterial road bracket on concrete pole with xarm				
ITEM NUMBER	STOCK CODE	DESCRIPTION	QTY	UNIT OF MEASURE	REMARKS
1	CB0278	Bracket with nuts and bolts	1		
2	HL6705	122W LED Luminaire with 15m cable	1		
2	HL5557	NEMA base PE Cell	1		
3	GF1804	Fuse holder with no fuse	1		
3	GF0925	10amp fuse	1		
4	CB0287	Mounting bracket concrete pole	1		
5	AB4567	12 dia bolt 150 long with nut	1		
6	FC0110	Clamp alum. 16mm	2		_FC016* if copper main
7	EE1120	6mm copper xlpe	2	metre	

SL5_S6	Arterial road bracket on concrete pole with xarm				
ITEM NUMBER	STOCK CODE	DESCRIPTION	QTY	UNIT OF MEASURE	REMARKS
1	CB0278	Bracket with nuts and bolts	1		
2	HL6707	143W LED Luminaire with 15m cable	1		
2	HL5557	NEMA base PE Cell	1		
3	GF1804	Fuse holder with no fuse	1		
3	GF0925	10amp fuse	1		
4	CB0287	Mounting bracket concrete pole	1		
5	AB4567	12 dia bolt 150 long with nut	1		
6	FC0110	Clamp alum. 16mm	2		_FC016* if copper main
7	EE1120	6mm copper xlpe	2	metre	

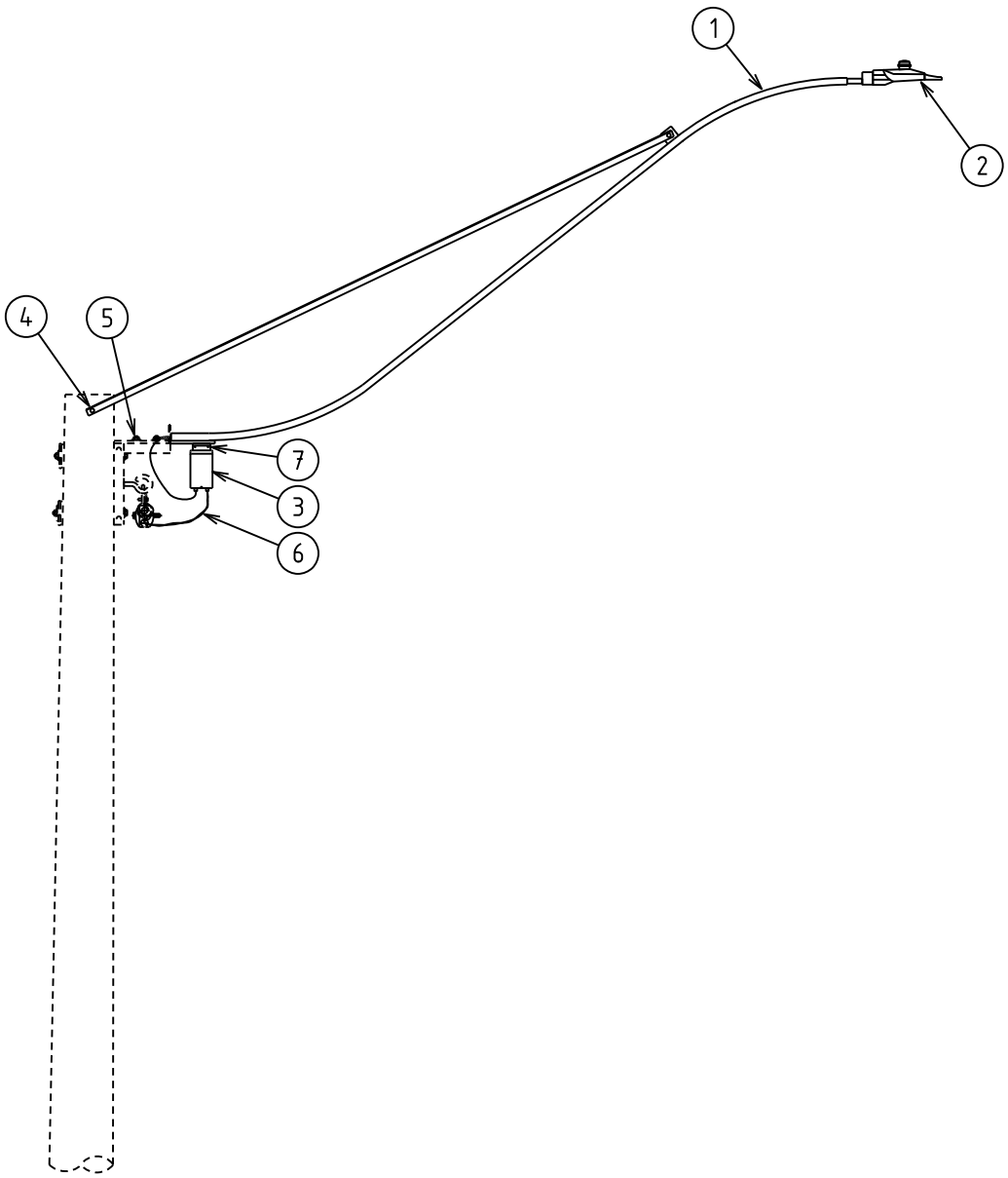

NOTES:
1. IF MINOR ROAD LIGHTING IS TO BE FITTED TO ARTERIAL ROAD LAYOUT REFER TO SL18 FOR BRACKETS.
2. REMOVE ARTERIAL ROAD LUMINAIRE AND REPLACE WITH MINOR ROAD LUMINAIRE REQUIREMENT

REV.	DATE	DESCRIPTION	ORGD.	CHKD.	APRD.
J	19.11.26	UPDATED LED HEAD SHAPE FOR NEW LUMINAIRE RANGE	ML	VAS	CO
H	13.09.22	ITEM 7 ADDED	DB	NMc	GS
G	17.08.18	LED LUMINAIRE ADDED	REE	JC	FK
F	24.08.16	ITEM No. 5 ADDED	CO	REE	GS
E	01.12.09	ORIGINAL ISSUE			

COMPATIBLE UNIT

ARTERIAL ROAD BRACKET FOR ABC

DISTRIBUTION DESIGN CATALOGUE

westernpower

DRAWN: JRR | DATE: 17-04-2014 | DRG. No. SL06

ORIGINATED: | SCALE: NTS

CHECKED: REE

APPROVED: GRANT STACY | REV. J | SHT. 1/1

CU	CU DESCRIPTION

SL6_S4	Arterial road bracket for LVABC				
ITEM NUMBER	STOCK CODE	DESCRIPTION	QTY	UNIT OF MEASURE	REMARKS
1	CB0430	Bracket with nuts and bolts	1		
2	HL6704	59W LED Luminaire with 15m cable	1		
2	HL5557	NEMA base PE Cell	1		
3	GF1804	Fuse holder with no fuse	1		
3	GF0925	10amp fuse	1		
4	AB6736	Pole bolt M12x400	1		Cut to length
5	AB2956	Set screw M12x25mm	2		
6	EE1120	6mm copper xlpe	1	metre	
7	AB2860	Set screw M8x25mm	2		
7	AW2416	Washer, spring 8mm	2		
7	AW3521	Washer, flat 8mm	2		
7	AN1491	Nut, hex M8	2		

SL6_S5	Arterial road bracket for LVABC				
ITEM NUMBER	STOCK CODE	DESCRIPTION	QTY	UNIT OF MEASURE	REMARKS
1	CB0430	Bracket with nuts and bolts	1		
2	HL6705	122W LED Luminaire with 15m cable	1		
2	HL5557	NEMA base PE Cell	1		
3	GF1804	Fuse holder with no fuse	1		
3	GF0925	10amp fuse	1		
4	AB6736	Pole bolt M12x400	1		Cut to length
5	AB2956	Set screw M12x25mm	2		
6	EE1120	6mm copper xlpe	1	metre	
7	AB2860	Set screw M8x25mm	2		
7	AW2416	Washer, spring 8mm	2		
7	AW3521	Washer, flat 8mm	2		
7	AN1491	Nut, hex M8	2		

CU	CU DESCRIPTION

SL6_S6	Arterial road bracket for LVABC				
ITEM NUMBER	STOCK CODE	DESCRIPTION	QTY	UNIT OF MEASURE	REMARKS
1	CB0430	bracket with nuts and bolts	1		
2	HL6707	143W LED Luminaire with 15m cable	1		
2	HL5557	NEMA base PE Cell	1		
3	GF1804	Fuse holder with no fuse	1		
3	GF0925	10amp fuse	1		
4	AB6736	Pole bolt M12x400	1		Cut to length
5	AB2956	Set screw M12x25mm	2		
6	EE1120	6mm copper xlpe	1	metre	
7	AB2860	Set screw M8x25mm	2		
7	AW2416	Washer, spring 8mm	2		
7	AW3521	Washer, flat 8mm	2		
7	AN1491	Nut, hex M8	2		

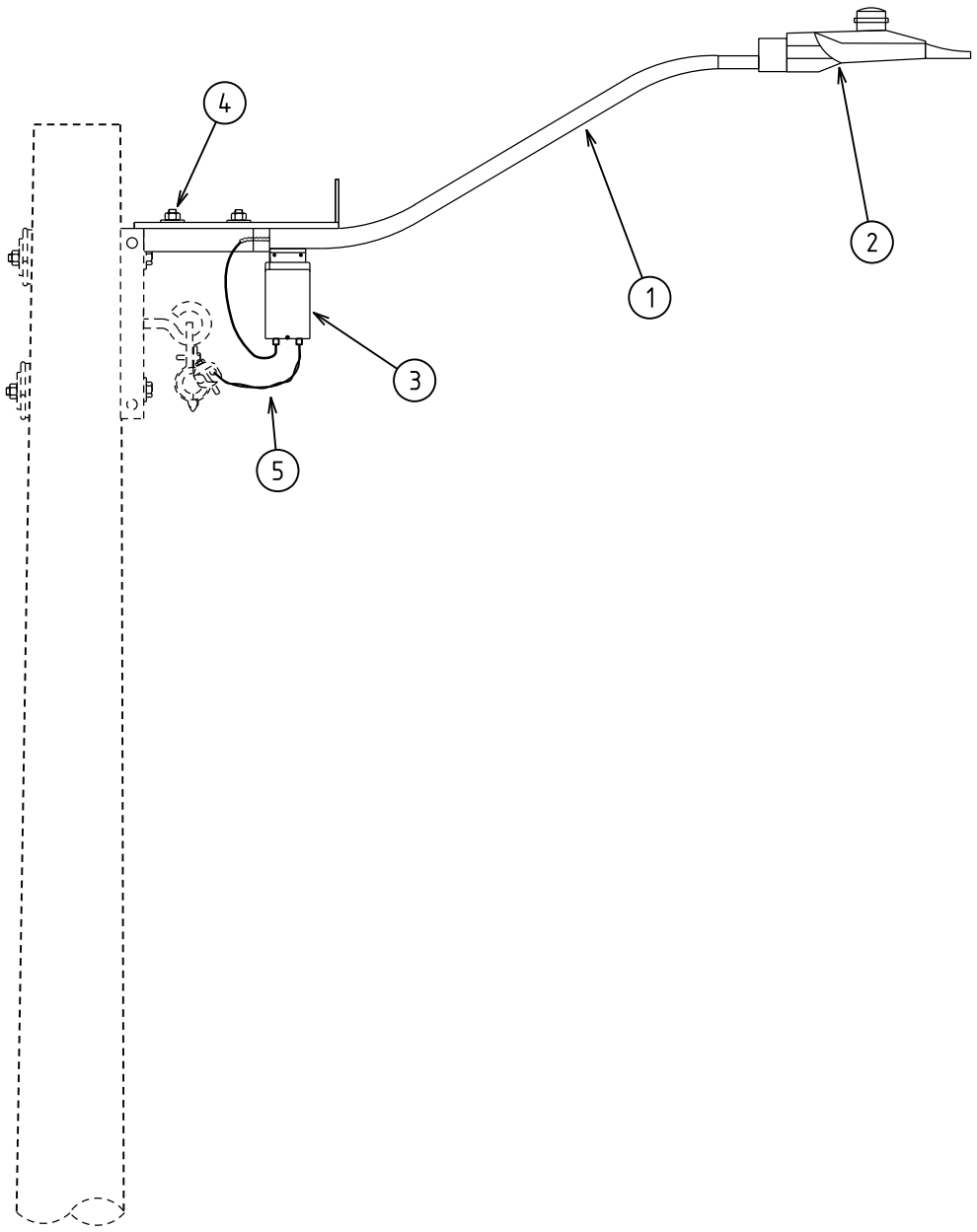

NOTES:
1. IF ARTERIAL LIGHTING IS TO BE FITTED TO MINOR ROAD LAYOUT REFER TO SL18 FOR BRACKETS.
2. REMOVE MINOR ROAD LUMINAIRE AND REPLACE WITH ARTERIAL ROAD LUMINAIRE REQUIREMENT.

REV.	DATE	DESCRIPTION	ORGD.	CHKD.	APRD.
H	19.11.26	UPDATED LED HEAD SHAPE FOR NEW LUMINAIRE RANGE	ML	VAS	CO
G	21.07.21	LED LUMINAIRE SHAPE CHANGED	REE	CO	GS
F	17.08.18	LED LUMINAIRE ADDED	REE	JC	GS
E	03.10.14	FORMAT CHANGED	JC	REE	GS
D	04.04.12	ORIGINAL ISSUE			

COMPATIBLE UNIT

MINOR ROAD BRACKET FOR ABC

DISTRIBUTION DESIGN CATALOGUE

westernpower

DRAWN: JRR | DATE: 17-04-2014 | DRG. No. SL07

ORIGINATED: | SCALE: NTS

CHECKED: REE

APPROVED: GRANT STACY

REV. H | SHT. 1/1

CU	CU DESCRIPTION

SL7_S1	Minor road bracket for LVABC				
ITEM NUMBER	STOCK CODE	DESCRIPTION	QTY	UNIT OF MEASURE	REMARKS
1	CB0424	Bracket	1		
2	HL6700	15W LED Luminaire with 8m cable	1		
2	HL5557	NEMA base PE Cell	1		
3	GF1804	Fuse holder with no fuse	1		
3	GF0925	10amp fuse	1		
4	AB2956	Set screw M12*25mm	2		
5	EE1120	6mm copper xlpe	2	metre	

SL7_S2	Minor road bracket for LVABC				
ITEM NUMBER	STOCK CODE	DESCRIPTION	QTY	UNIT OF MEASURE	REMARKS
1	CB0424	Bracket	1		
2	HL6803	29W LED Luminaire with 8m cable	1		
2	HL5557	NEMA base PE Cell	1		
3	GF1804	Fuse holder with no fuse	1		
3	GF0925	10amp fuse	1		
4	AB2956	Set screw M12*25mm	2		
5	EE1120	6mm copper xlpe	2	metre	

SL7_S3	Minor road bracket for LVABC				
ITEM NUMBER	STOCK CODE	DESCRIPTION	QTY	UNIT OF MEASURE	REMARKS
1	CB0424	Bracket	1		
2	HL6802	33W LED Luminaire with 8m cable	1		
2	HL5557	NEMA base PE Cell	1		
3	GF1804	Fuse holder with no fuse	1		
3	GF0925	10amp fuse	1		
4	AB2956	Set screw M12*25mm	2		
5	EE1120	6mm copper xlpe	2	metre	

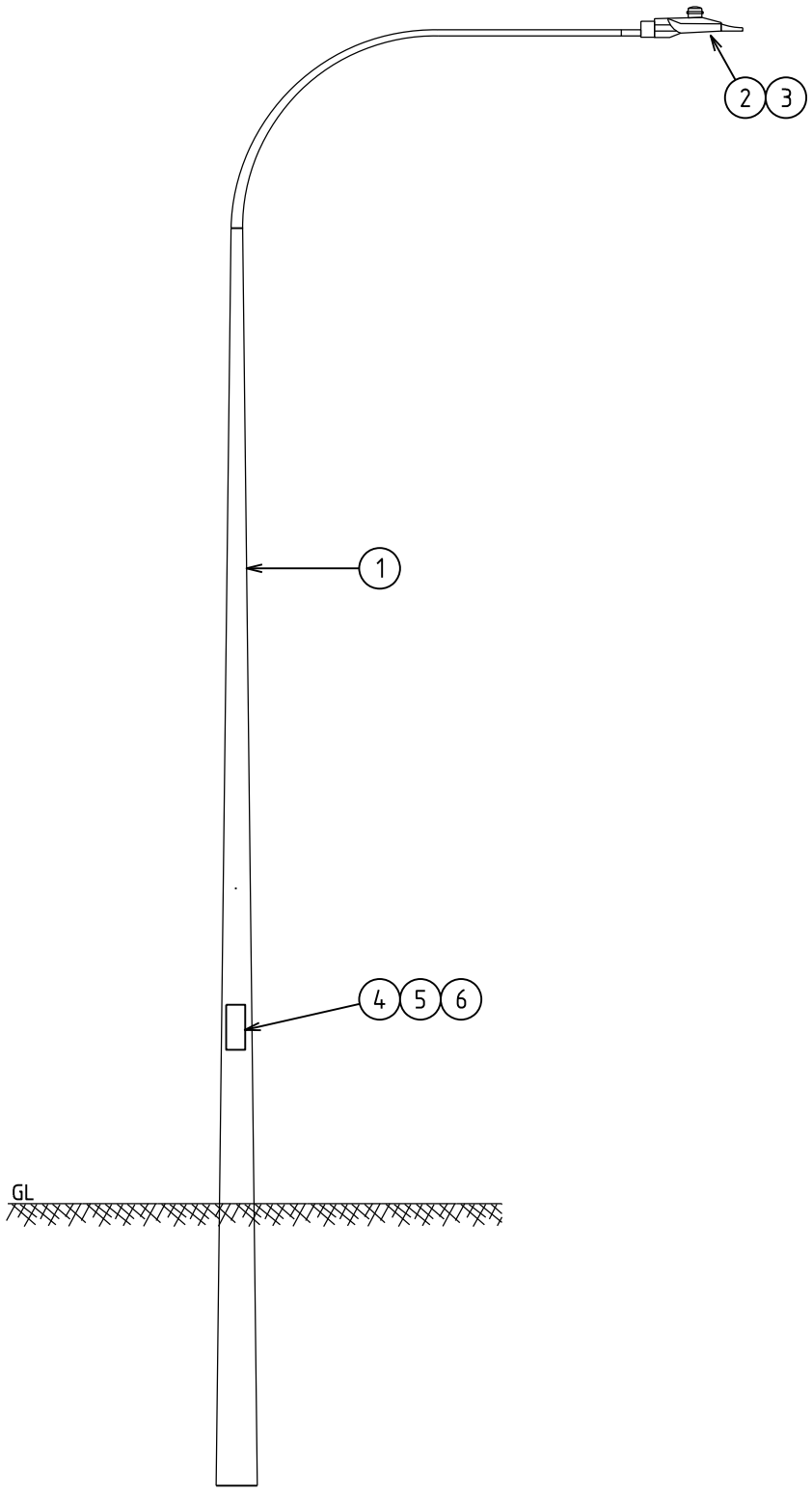

NOTES:
1. REFER TO R26 AND R27 FOR STREET LIGHT WIRING / SYSTEM DESIGN.

REV.	DATE	DESCRIPTION	ORGD.	CHKD.	APRD.
G	19.11.26	UPDATED LED HEAD SHAPE FOR NEW LUMINAIRE RANGE	ML	VAS	CO
F	24.06.20	ITEM 6 (HZ0135) ADDED	CO	REE	GS
E	17.08.18	LED LUMINAIRE ADDED	REE	JC	FK
D	04.04.12	ORIGINAL ISSUE			

COMPATIBLE UNIT

SINGLE OUTREACH
STEEL STANDARD - 6.5M

DISTRIBUTION DESIGN CATALOGUE

westernpower

DRAWN: JRR	DATE: 17-04-2014	DRG. No. SL08
ORIGINATED:	SCALE: NTS	
CHECKED: REE		
APPROVED: GRANT STACY		REV. G / SHT. 1/1

CU	CU DESCRIPTION

SL8_S1	Single outreach steel standard 6.5m				
ITEM NUMBER	STOCK CODE	DESCRIPTION	QTY	UNIT OF MEASURE	REMARKS
1	CW0255	6.5m SL steel pole, metal galvanised	1		
2	HL6700	15W LED Luminaire with 8m cable	1		
3	HL5557	NEMA base PE Cell	1		
4	HZ0131	SL fuse cut-out	1		
5	GF1300	Fuse cartridge 10 amp	1		
6	HZ0135	Cut-out mounting bracket	1		

SL8_S2	Single outreach steel standard 6.5m				
ITEM NUMBER	STOCK CODE	DESCRIPTION	QTY	UNIT OF MEASURE	REMARKS
1	CW0255	6.5m SL steel pole, metal galvanised	1		
2	HL6803	29W LED Luminaire with 8m cable	1		
3	HL5557	NEMA base PE Cell	1		
4	HZ0131	SL fuse cut-out	1		
5	GF1300	Fuse cartridge 10 amp	1		
6	HZ0135	Cut-out mounting bracket	1		

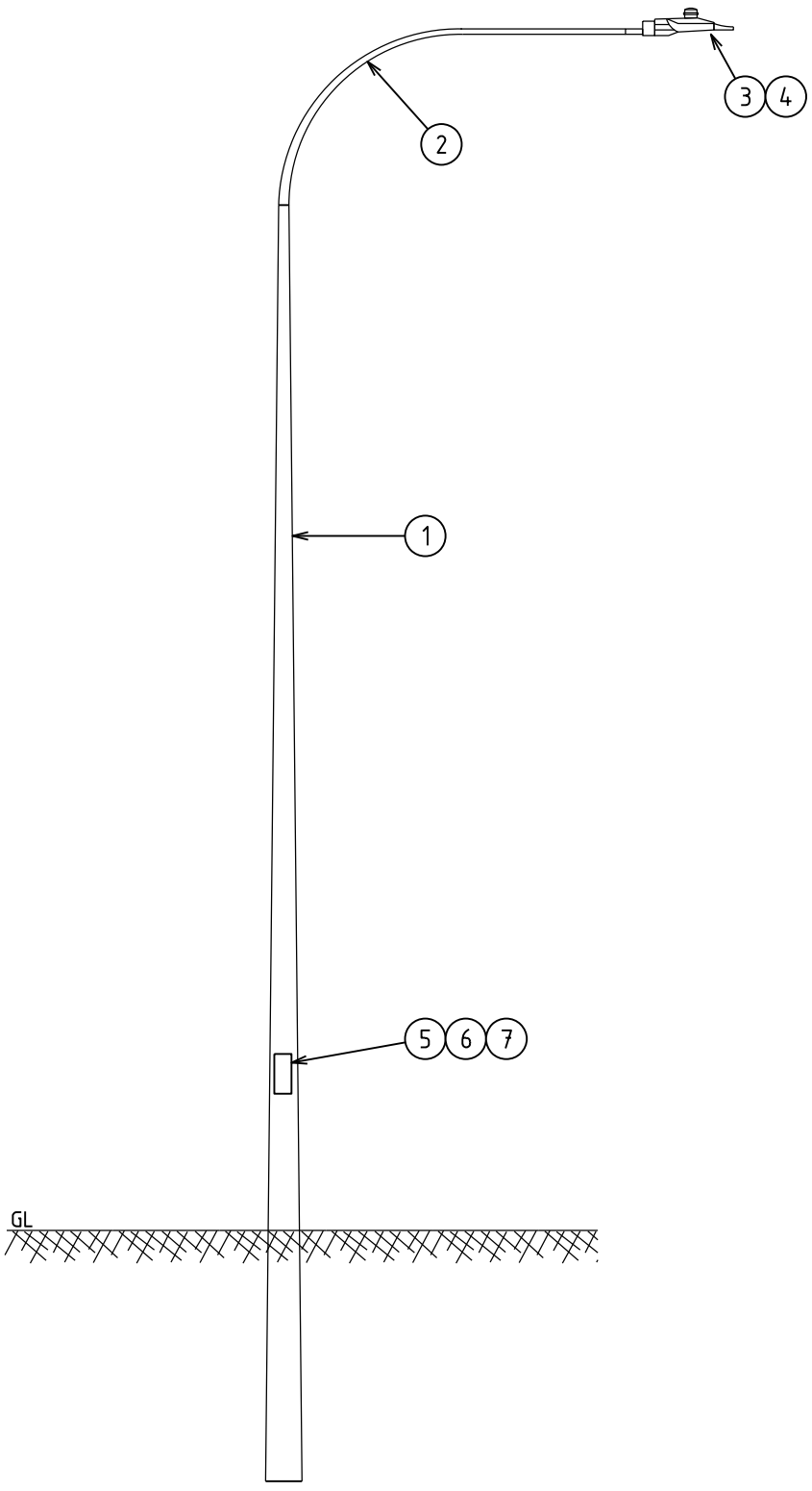

NOTES:
1. REFER TO R26 AND R27 FOR STREET LIGHT WIRING / SYSTEM DESIGN.

REV.	DATE	DESCRIPTION	ORGD.	CHKD.	APRD.
J	19.11.26	UPDATED LED HEAD SHAPE FOR NEW LUMINAIRE RANGE	ML	VAS	CO
I	24.06.20	ITEM 7 (HZ0135) ADDED	CO	REE	GS
H	17.08.18	NOTE REVISED AND LED LUMINAIRE ADDED	REE	JC	FK
G	01.12.09	ORIGINAL ISSUE			

COMPATIBLE UNIT

SINGLE OUTREACH STEEL STANDARD - 10.5M

DISTRIBUTION DESIGN CATALOGUE

westernpower

DRAWN: JRR | DATE: 17-04-2014 | DRG. No. SL09

ORIGINATED: | SCALE: NTS

CHECKED: REE

APPROVED: GRANT STACY | REV. J | SHT. 1/1

CU	CU DESCRIPTION

SL9_S3	Single outreach steel standard 10.5m				
ITEM NUMBER	STOCK CODE	DESCRIPTION	QTY	UNIT OF MEASURE	REMARKS
1	CW0275	10.5m SL steel pole, metal galvanised	1		
2	CW0278	Single outreach arm	1		
3	HL6801	33W LED Luminaire with 15m cable	1		
4	HL5557	NEMA base PE Cell	1		
5	GF1300	Fuse cartridge 10 amp	1		
6	HZ0131	SL fuse cut-out	1		
7	HZ0135	Cut-out mounting bracket	1		

SL9_S4	Single outreach steel standard 10.5m				
ITEM NUMBER	STOCK CODE	DESCRIPTION	QTY	UNIT OF MEASURE	REMARKS
1	CW0275	10.5m SL steel pole, metal galvanised	1		
2	CW0278	Single outreach arm	1		
3	HL6704	59W LED Luminaire with 15m cable	1		
4	HL5557	NEMA base PE Cell	1		
5	GF1300	Fuse cartridge 10 amp	1		
6	HZ0131	SL fuse cut-out	1		
7	HZ0135	Cut-out mounting bracket	1		

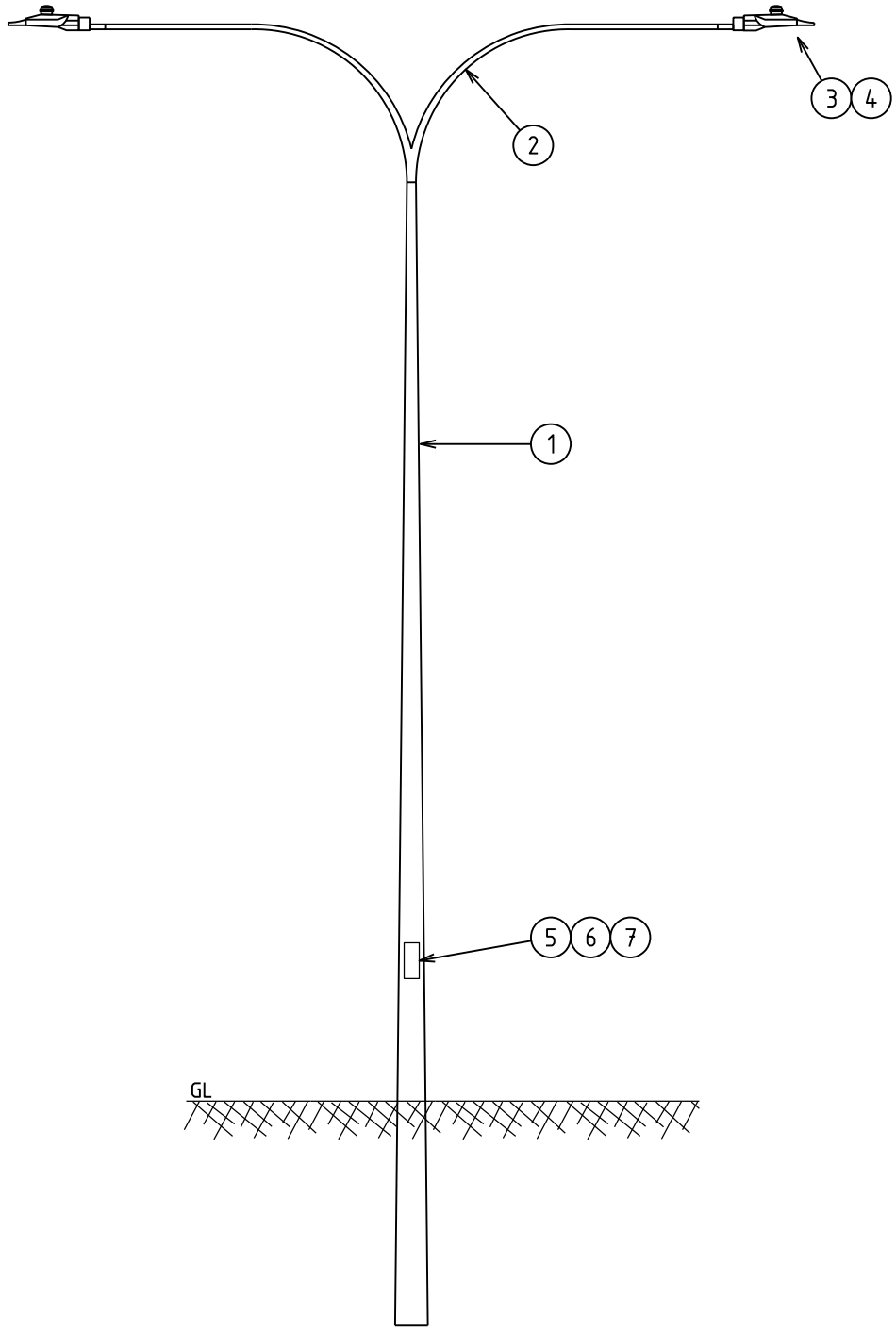

NOTES:
1. REFER TO R26 AND R27 FOR STREET LIGHT WIRING / SYSTEM DESIGN.

REV.	DATE	DESCRIPTION	ORGD.	CHKD.	APRD.
J	19.11.26	UPDATED LED HEAD SHAPE FOR NEW LUMINAIRE RANGE	ML	VAS	CO
I	24.06.20	ITEM 7 (HZ0135) ADDED	CO	REE	GS
H	17.08.18	NOTE REVISED AND LED ADDED	REE	JC	FK
G	17.03.06	ORIGINAL ISSUE			

COMPATIBLE UNIT

DOUBLE OUTREACH
STEEL STANDARD - 10.5M

DISTRIBUTION DESIGN CATALOGUE

westernpower

DRAWN: JRR	DATE: 17-04-2014	DRG. No. SL10
ORIGINATED:	SCALE: NTS	
CHECKED: REE		
APPROVED: GRANT STACY	REV. J	SHT. 1/1

CU	CU DESCRIPTION

SL10_S3	Double outreach steel standard 10.5m				
ITEM NUMBER	STOCK CODE	DESCRIPTION	QTY	UNIT OF MEASURE	REMARKS
1	CW0275	Pole 10.5m	1		
2	CW0279	Double outreach arm	1		
3	HL6801	33W LED Luminaire with 15m cable	2		
4	HL5557	NEMA base PE Cell	2		
5	GF1300	Fuse cartridge 10 amp	2		
6	HZ0131	SL fuse cut-out	1		
7	HZ0135	Cut-out mounting bracket	1		

SL10_S4	Double outreach steel standard 10.5m				
ITEM NUMBER	STOCK CODE	DESCRIPTION	QTY	UNIT OF MEASURE	REMARKS
1	CW0275	Pole 10.5m	1		
2	CW0279	Double outreach arm	1		
3	HL6704	59W LED Luminaire with 15m cable	2		
4	HL5557	NEMA base PE Cell	2		
5	GF1300	Fuse cartridge 10 amp	2		
6	HZ0131	SL fuse cut-out	1		
7	HZ0135	Cut-out mounting bracket	1		

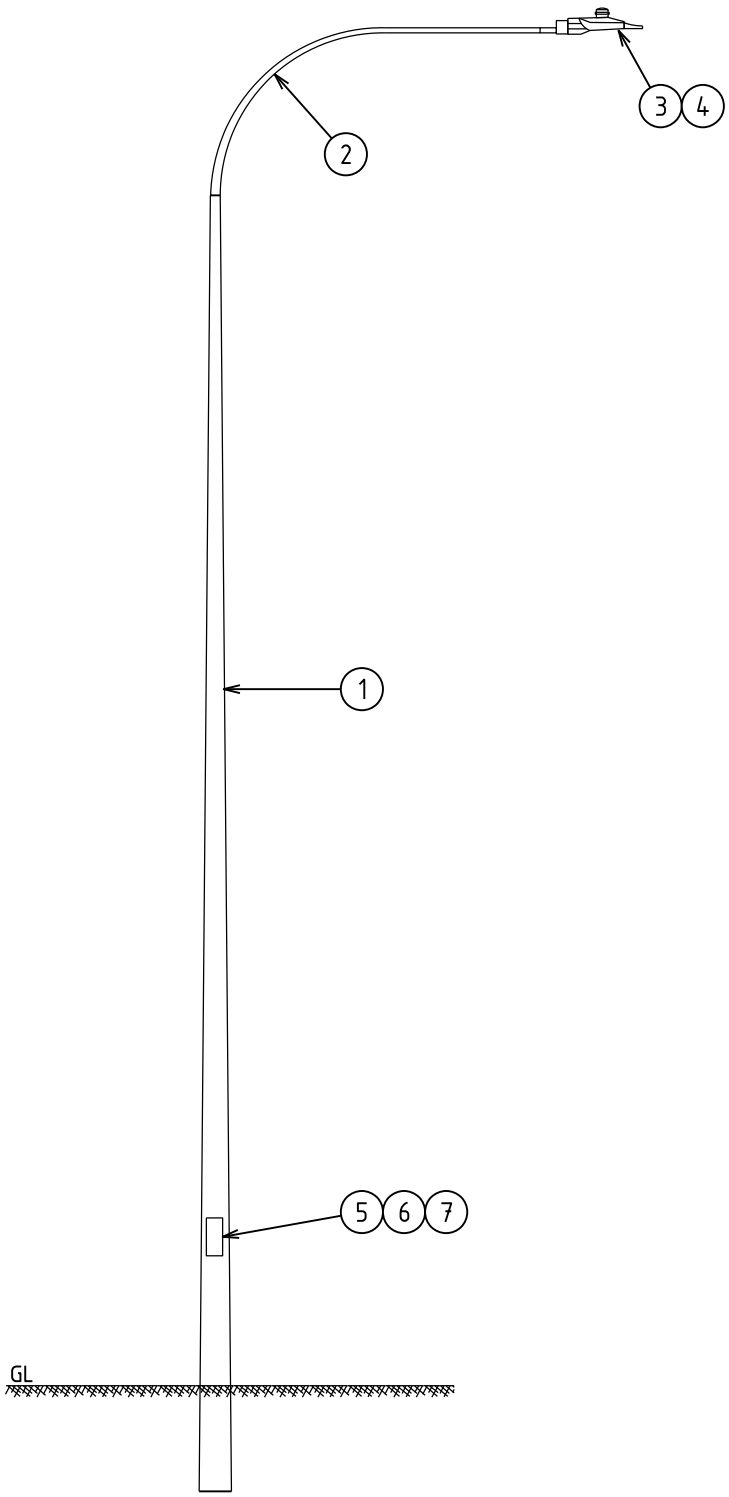

REV.	DATE	DESCRIPTION	ORGD.	CHKD.	APRD.
J	19.11.26	UPDATED LED HEAD SHAPE FOR NEW LUMINAIRE RANGE	ML	VAS	CO
I	24.06.20	ITEM 7 (HZ0135) ADDED	CO	REE	GS
H	17.08.18	NOTE REVISED AND LED ADDED	REE	JC	FK
G	01.12.09	ORIGINAL ISSUE			

COMPATIBLE UNIT

SINGLE OUTREACH
STEEL STANDARD - 12.5M

DISTRIBUTION DESIGN CATALOGUE

westernpower

DRAWN: JRR	DATE: 17-04-2014	DRG. No. SL11
ORIGINATED:	SCALE: NTS	
CHECKED: REE		
APPROVED: GRANT STACY	REV. J	SHT. 1/1

CU	CU DESCRIPTION

SL11_S5	Single outreach steel standard 12.5m				
ITEM NUMBER	STOCK CODE	DESCRIPTION	QTY	UNIT OF MEASURE	REMARKS
1	CW0276	Pole 12.5m	1		
2	CW0278	Single outreach arm	1		
3	HL6705	122W LED Luminaire with 15m cable	1		
4	HL5557	NEMA base PE Cell	1		
5	GF1300	Fuse cartridge 10 amp	1		
6	HZ0131	SL fuse cut-out	1		
7	HZ0135	Cut-out mounting bracket	1		

SL11_S6	Single outreach steel standard 12.5m				
ITEM NUMBER	STOCK CODE	DESCRIPTION	QTY	UNIT OF MEASURE	REMARKS
1	CW0276	Pole 12.5m	1		
2	CW0278	Single outreach arm	1		
3	HL6707	143W LED Luminaire with 15m cable	1		
4	HL5557	NEMA base PE Cell	1		
5	GF1300	Fuse cartridge 10 amp	1		
6	HZ0131	SL fuse cut-out	1		
7	HZ0135	Cut-out mounting bracket	1		

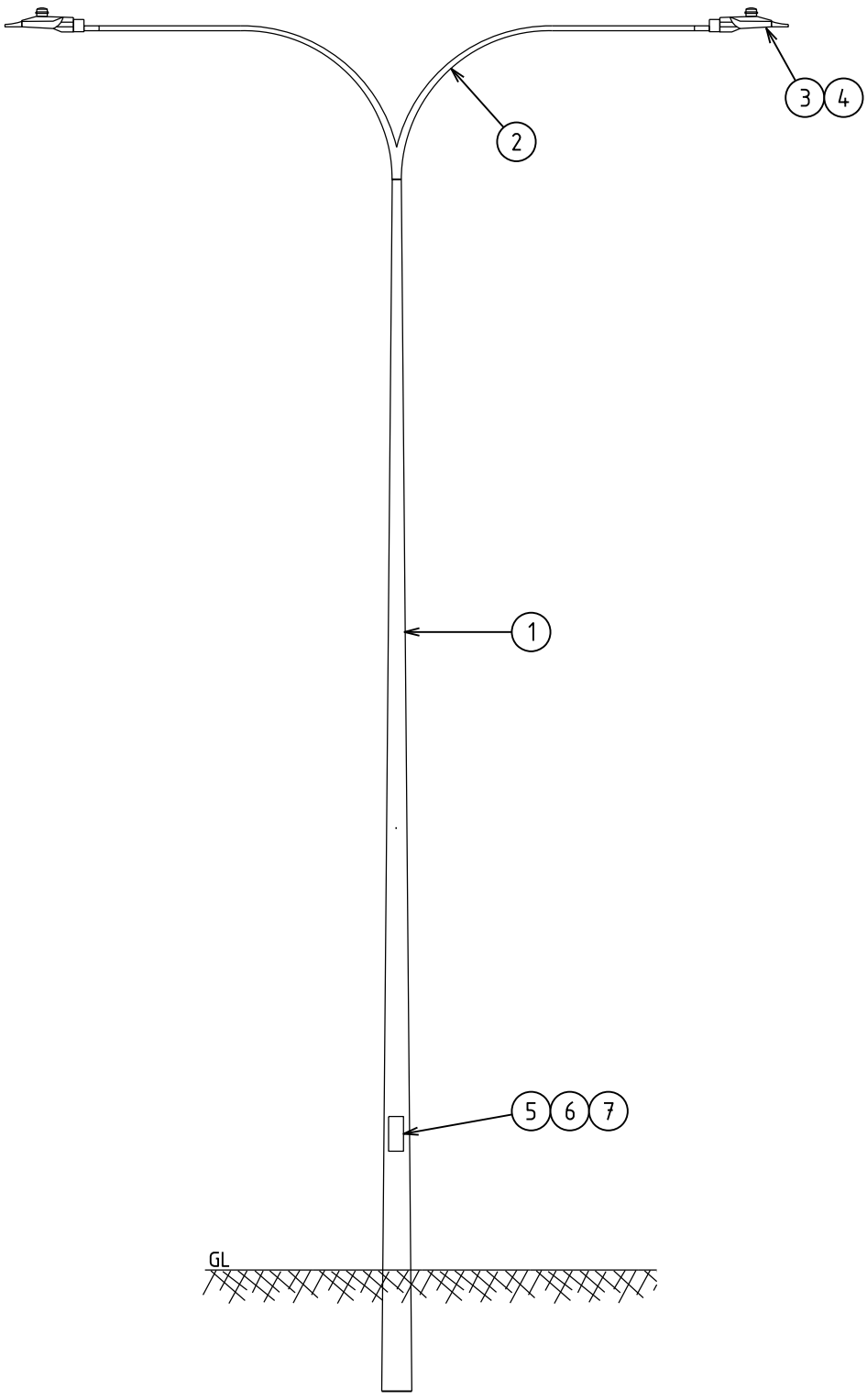

NOTES:
1. REFER TO R26 AND R27 FOR STREET LIGHT WIRING / SYSTEM DESIGN.

REV.	DATE	DESCRIPTION	ORGD.	CHKD.	APRD.
J	19.11.26	UPDATED LED HEAD SHAPE FOR NEW LUMINAIRE RANGE	ML	VAS	CO
I	24.06.20	ITEM 7 (HZ0135) ADDED	CO	REE	GS
H	17.08.18	NOTE REVISED AND LED ADDED	REE	JC	FK
G	01.12.09	ORIGINAL ISSUE			

COMPATIBLE UNIT

DOUBLE OUTREACH STEEL STANDARD - 12.5M

DISTRIBUTION DESIGN CATALOGUE

westernpower

DRAWN: JRR	DATE: 17-04-2014	DRG. No. SL12
ORIGINATED:	SCALE: NTS	
CHECKED: REE		
APPROVED: GRANT STACY	REV. J	SHT. 1/1

CU	CU DESCRIPTION

SL12_S5	Double outreach steel standard 12.5m				
ITEM NUMBER	STOCK CODE	DESCRIPTION	QTY	UNIT OF MEASURE	REMARKS
1	CW0276	Pole 12.5m	1		
2	CW0279	Double outreach arm	1		
3	HL6705	122W LED Luminaire with 15m cable	2		
4	HL5557	NEMA base PE Cell	2		
5	GF1300	Fuse cartridge 10 amp	2		
6	HZ0131	SL fuse cut-out	1		
7	HZ0135	Cut-out mounting bracket	1		

SL12_S6	Double outreach steel standard 12.5m				
ITEM NUMBER	STOCK CODE	DESCRIPTION	QTY	UNIT OF MEASURE	REMARKS
1	CW0276	Pole 12.5m	1		
2	CW0279	Double outreach arm	1		
3	HL6707	143W LED Luminaire with 15m cable	2		
4	HL5557	NEMA base PE Cell	2		
5	GF1300	Fuse cartridge 10 amp	2		
6	HZ0131	SL fuse cut-out	1		
7	HZ0135	Cut-out mounting bracket	1		

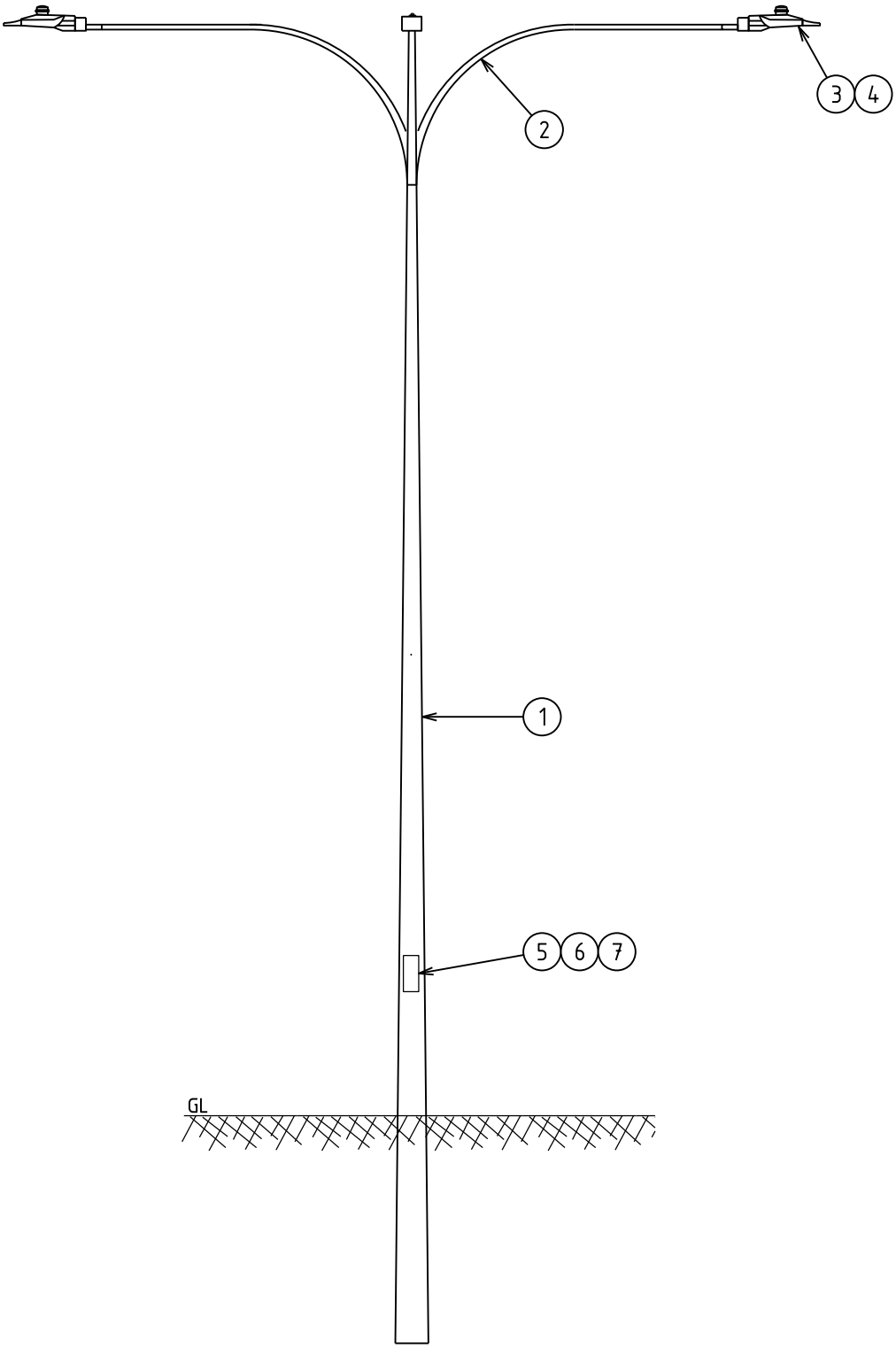

NOTES:
1. REFER TO R26 AND R27 FOR STREET LIGHT WIRING / SYSTEM DESIGN.

REV.	DATE	DESCRIPTION	ORGD.	CHKD.	APRD.
F	19.11.26	UPDATED LED HEAD SHAPE FOR NEW LUMINAIRE RANGE	ML	VAS	CO
E	24.06.20	ITEM 7 (HZ0135) ADDED	CO	REE	GS
D	17.08.18	NOTE REVISED AND LED ADDED	REE	JC	FK
C	01.12.09	ORIGINAL ISSUE			

COMPATIBLE UNIT

4 WAY OUTREACH STEEL STANDARD - 10.5m

DISTRIBUTION DESIGN CATALOGUE

westernpower

DRAWN: JRR	DATE: 22-04-2014	DRG. No. SL16
ORIGINATED:	SCALE: NTS	
CHECKED: REE		
APPROVED: GRANT STACY	REV. F	SHT. 1/1

CU	CU DESCRIPTION

SL16_S3	4 Way outreach steel standard 10.5m				
ITEM NUMBER	STOCK CODE	DESCRIPTION	QTY	UNIT OF MEASURE	REMARKS
1	CW0275	Pole 10.5m	1		
2	CW1317	4 Way outreach arm	1		
3	HL6801	33W LED Luminaire with 15m cable	4		
4	HL5557	NEMA base PE Cell	4		
5	GF1300	Fuse cartridge 10 amp	2		
6	HZ0131	SL fuse cut-out	1		
7	HZ0135	Cut-out mounting bracket	1		

SL16_S4	4 Way outreach steel standard 10.5m				
ITEM NUMBER	STOCK CODE	DESCRIPTION	QTY	UNIT OF MEASURE	REMARKS
1	CW0275	Pole 10.5m	1		
2	CW1317	4 Way outreach arm	1		
3	HL6704	59W LED Luminaire with 15m cable	4		
4	HL5557	NEMA base PE Cell	4		
5	GF1300	Fuse cartridge 10 amp	2		
6	HZ0131	SL fuse cut-out	1		
7	HZ0135	Cut-out mounting bracket	1		

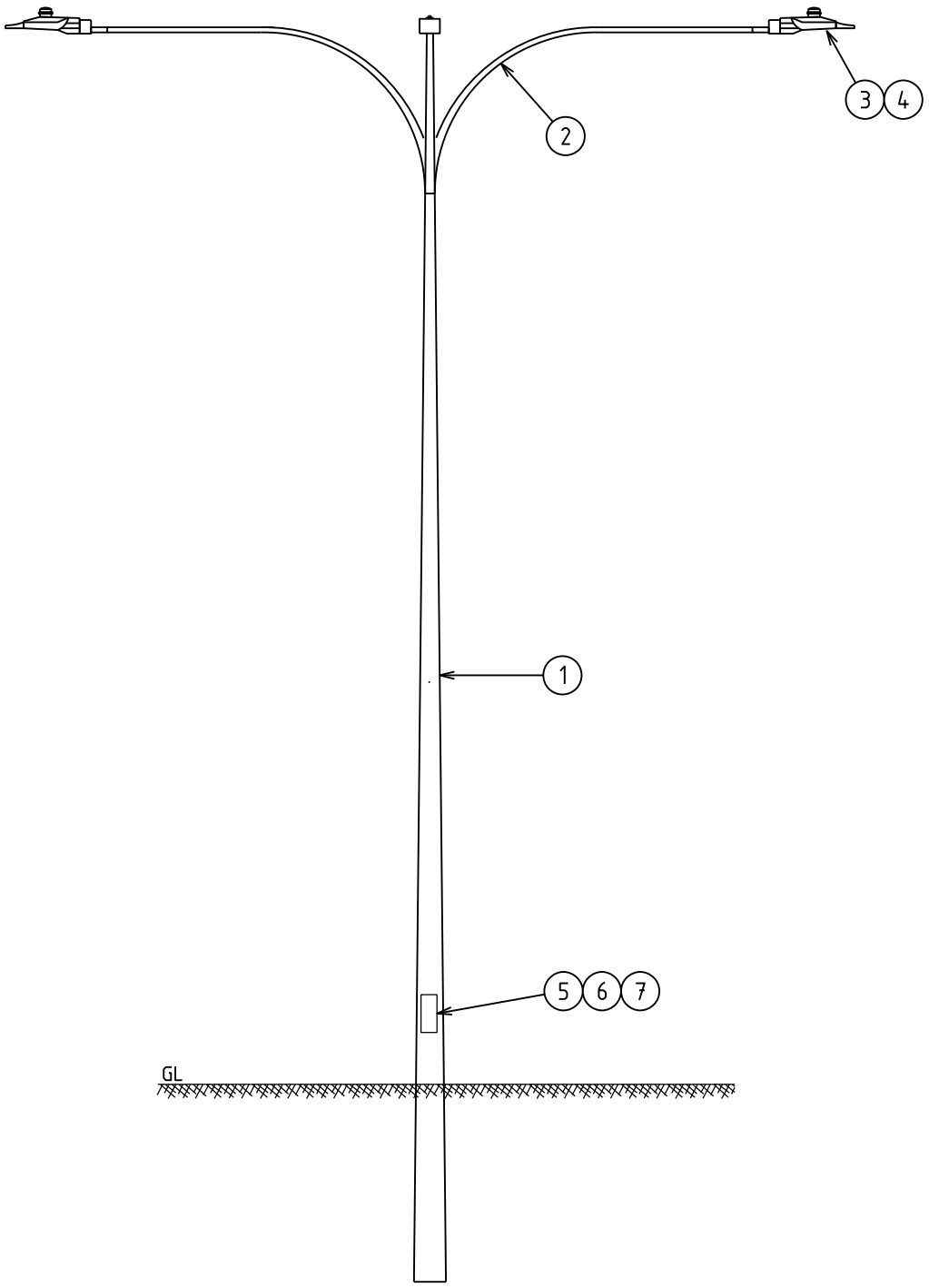

NOTES:
1. REFER TO R26 AND R27 FOR STREET LIGHT WIRING / SYSTEM DESIGN.

REV.	DATE	DESCRIPTION	ORGD.	CHKD.	APRD.
F	19.11.26	UPDATED LED HEAD SHAPE FOR NEW LUMINAIRE RANGE	ML	VAS	CO
E	24.06.20	ITEM 7 (HZ0135) ADDED	CO	REE	GS
D	17.08.18	NOTE REVISED AND LED ADDED	REE	JC	FK
C	01.12.09	ORIGINAL ISSUE			

COMPATIBLE UNIT

4 WAY OUTREACH STEEL STANDARD - 12.5M

DISTRIBUTION DESIGN CATALOGUE

westernpower

DRAWN: JRR	DATE: 22-04-2014	DRG. No. SL17
ORIGINATED:	SCALE: NTS	
CHECKED: REE		
APPROVED: GRANT STACY	REV. F	SHT. 1/1

CU	CU DESCRIPTION

SL17_S5	4 Way outreach steel standard 12.5m				
ITEM NUMBER	STOCK CODE	DESCRIPTION	QTY	UNIT OF MEASURE	REMARKS
1	CW0276	Pole 12.5m	1		
2	CW1317	4 Way outreach arm	1		
3	HL6705	122W LED Luminaire with 15m cable	4		
4	HL5557	NEMA base PE Cell	4		
5	GF1300	Fuse cartridge 10 amp	2		
6	HZ0131	SL fuse cut-out	1		
7	HZ0135	Cut-out mounting bracket	1		

SL17_S6	4 Way outreach steel standard 12.5m				
ITEM NUMBER	STOCK CODE	DESCRIPTION	QTY	UNIT OF MEASURE	REMARKS
1	CW0276	Pole 12.5m	1		
2	CW1317	4 Way outreach arm	1		
3	HL6707	143W LED Luminaire with 15m cable	4		
4	HL5557	NEMA base PE Cell	4		
5	GF1300	Fuse cartridge 10 amp	2		
6	HZ0131	SL fuse cut-out	1		
7	HZ0135	Cut-out mounting bracket	1		

LUMINAIRE SIDE BRACKET/COLUMN SIDE

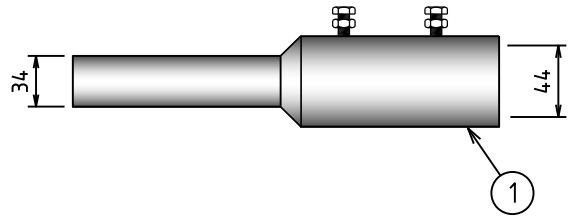

FOR USE ON CU's (OVERHEAD BRACKET)
SL 3, SL03-1
SL 5, SL05-1
SL 6, SL06-1
SL 24, SL24-1
TO FIT ROAD GRACE

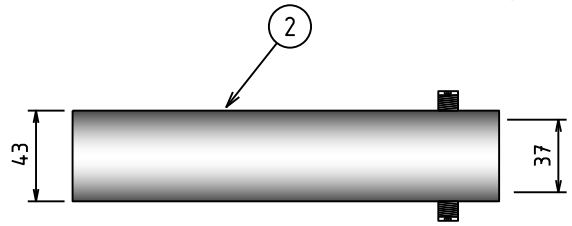

FOR USE ON CU (6.5m COLUMN)
SL 8, SL08-1
TO FIT ROAD FLAIR

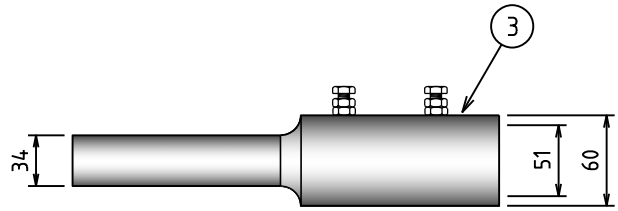

FOR USE ON CU's (10.5 & 12.5 COLUMNS)
SL 9, SL09-1
SL 10, SL10-1
SL 11, SL11-1
SL 12, SL12-1
SL 16, SL16-1
SL 17, SL17-1
TO FIT BOURKE HILL LUMINAIRE

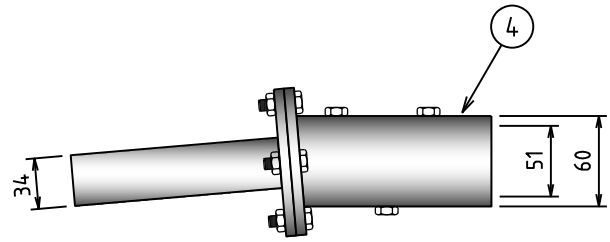

FOR USE WITH 10.5 & 12.5 COLUMNS
TO REDUCE UPLIFT BY 5° OR 10°
(LUMINAIRE MUST NOT BE REDUCED
BELOW HORIZONTAL)
TO FIT ROAD FLAIR

LUMINAIRE	SOCKET SIZE / RANGE
ROAD GRACE	25 - 40
ROAD FLAIR	42 - 60
BOURKE HILL	37
PARK VILLE	47
KENSINGTON	80

OUTREACH	BOSS SIZE		BRACKET/COLUMNS		
	NB	OD	6.5	10.5	12.5
MINOR ROAD	25	33.5	✓	✗	✗
ARTERIAL ROAD	40	48.3	✗	✓	✓

O/H BRACKET	BOSS SIZE	
	NB	OD
MINOR ROAD	25	34
ARTERIAL ROAD	40	48
ARTERIAL ROAD ABC	32	42

NOTES:
1. ALL DIMENSIONS ARE IN MILLIMETRES.

REV.	DATE	DESCRIPTION	ORGD.	CHKD.	APRD.
F	15.11.23	TABLES REVISED	JT	ML	CO
E	18.12.19	ANGLE ADAPTOR ADDED	REE	NN	FK
D	06.06.19	MORE DETAILS ADDED	REE	NN	FK
C	09.01.19	DIMENSIONS & TABLE ADDED	REE	NN	GS

COMPATIBLE UNIT

LUMINAIRE ADAPTORS

DISTRIBUTION DESIGN CATALOGUE

westernpower

DRAWN: JRR | DATE: 22-04-2014 | DRG. No. SL18

ORIGINATED: | SCALE: NTS

CHECKED: REE

APPROVED: GRANT STACY | REV. F | SHT. 1/1

CU	CU DESCRIPTION

SL18_GRACE	Luminaire adaptor for RoadGrace LED (equiv 42W CFL, 125W MH & HPS)				
ITEM NUMBER	STOCK CODE	DESCRIPTION	QTY	UNIT OF MEASURE	REMARKS
1	HL3345	Luminaire adaptor for RoadGrace	1		

SL18_FLAIR	Luminaire adaptor for RoadFlair LED (equiv 150/250 MH & HPS)				
ITEM NUMBER	STOCK CODE	DESCRIPTION	QTY	UNIT OF MEASURE	REMARKS
2	HL3346	Luminaire adaptor for RoadFlair	1		

SL18_BOURKE	Luminaire adaptor for Bourke Hill Luminaire				
ITEM NUMBER	STOCK CODE	DESCRIPTION	QTY	UNIT OF MEASURE	REMARKS
3	HL3347	Luminaire adaptor for Decorative Bourke Hill	1		

SL18_REDUCE	Luminaire adaptor for RoadFlair LED to non-standard columns				
ITEM NUMBER	STOCK CODE	DESCRIPTION	QTY	UNIT OF MEASURE	REMARKS
4	HL3342	Luminaire adaptor for RoadFlair to non-std columns	1		

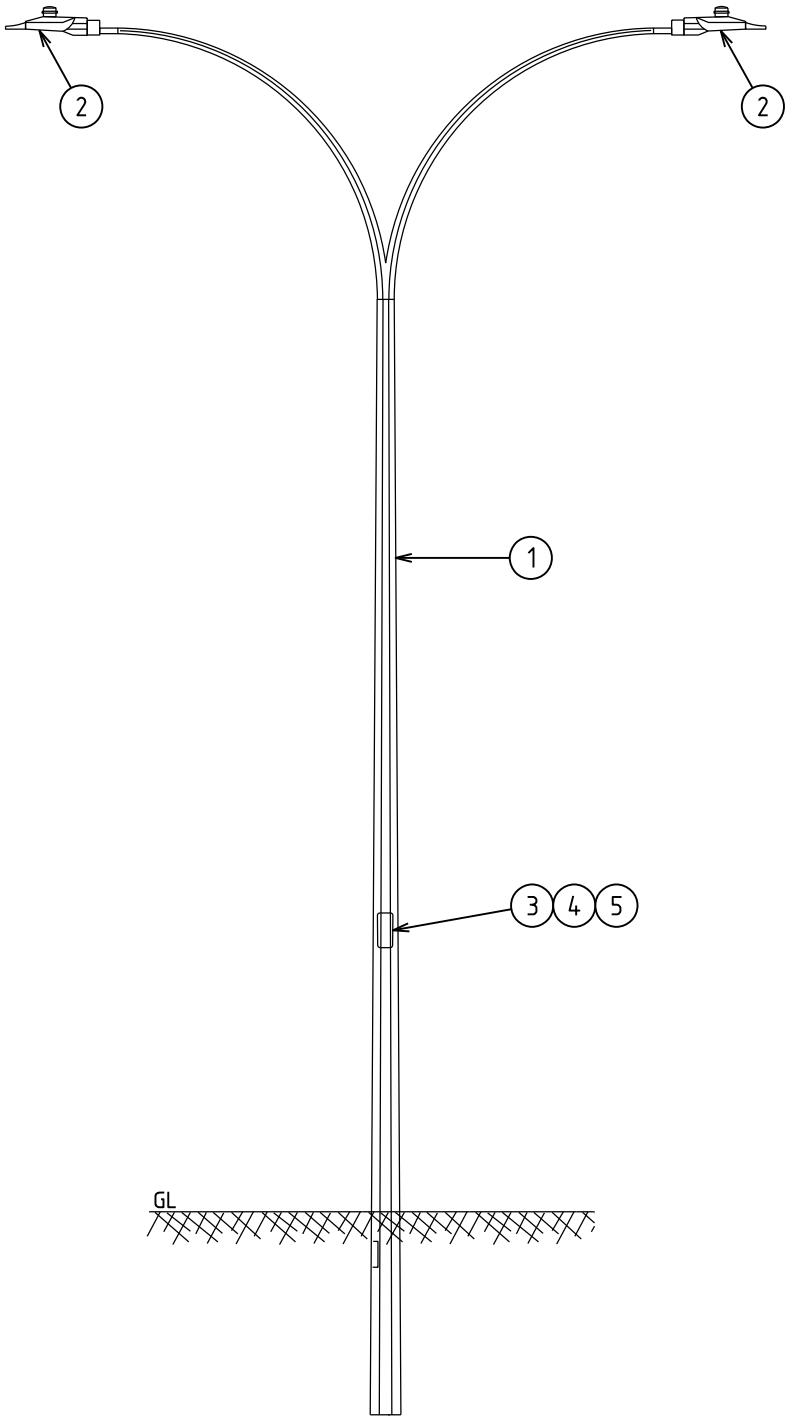

NOTES:
1. REFER TO R26 AND R27 FOR STREET LIGHT WIRING / SYSTEM DESIGN.

REV.	DATE	DESCRIPTION	ORGD.	CHKD.	APRD.
F	19.11.26	UPDATED LED HEAD SHAPE FOR NEW LUMINAIRE RANGE	ML	VAS	CO
E	24.06.20	ITEM 5 (HZ0135) ADDED	CO	REE	GS
D	17.08.18	LED LUMINAIRE ADDED	REE	JC	FK
C	08.08.01	ORIGINAL ISSUE			

COMPATIBLE UNIT

DOUBLE OUTREACH STEEL STANDARD - 6.5m

DISTRIBUTION DESIGN CATALOGUE

westernpower

DRAWN: JRR	DATE: 22-04-2014	DRG. No. SL20
ORIGINATED:	SCALE: NTS	
CHECKED: REE		
APPROVED: GRANT STACY	REV. F	SHT. 1/1

CU	CU DESCRIPTION

SL20_S1	Double outreach steel standard 6.5m				
ITEM NUMBER	STOCK CODE	DESCRIPTION	QTY	UNIT OF MEASURE	REMARKS
1	CW1331	Pole 6.5m	1		
2	HL6700	15W LED Luminaire with 8m cable	2		
2	HL5557	NEMA base PE Cell	2		
3	GF1300	Fuse cartridge 10 amp	2		
4	HZ0131	SL fuse cut-out	1		
5	HZ0135	Cut-out mounting bracket	1		

SL20_S2	Double outreach steel standard 6.5m				
ITEM NUMBER	STOCK CODE	DESCRIPTION	QTY	UNIT OF MEASURE	REMARKS
1	CW1331	Pole 6.5m	1		
2	HL6803	29W LED Luminaire with 8m cable	2		
2	HL5557	NEMA base PE Cell	2		
5	GF1300	Fuse cartridge 10 amp	2		
6	HZ0131	SL fuse cut-out	1		
7	HZ0135	Cut-out mounting bracket	1		

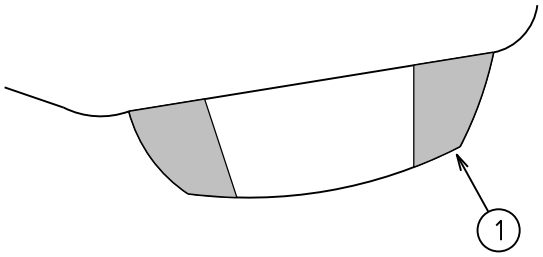

TRADITIONAL

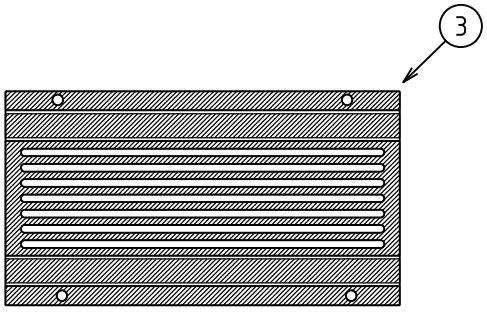

LED ROADGRACE

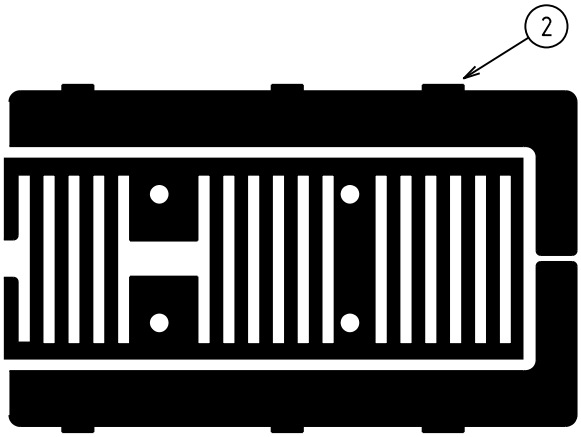

LED ROADFLAIR

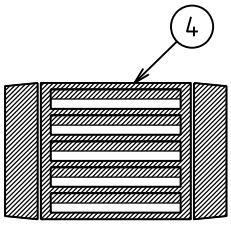

LED ROADFLAIR PRO
SIGNIFY

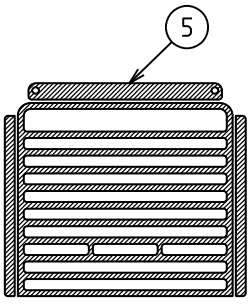

LED IGNIS MINI
ORANGETEK

REV.	DATE	DESCRIPTION	ORGD.	CHKD.	APRD.
E	19.11.26	ITEM 4 & 5 ADDED	ML	VAS	CO
D	17.11.25	DETAIL UPDATED	ML	SL	MM
C	24.02.23	TITLE REVISED, DRAWING COMBINED WITH SL22	ML	CO	PC
B	12.03.20	TITLE REVISED	REE	NN	GS
A	10.06.10	ORIGINAL ISSUE			

COMPATIBLE UNIT

GLARE SHIELDS

DISTRIBUTION DESIGN CATALOGUE

westernpower

DRAWN: JRR | DATE: 22-04-2014 | DRG. No. SL21

ORIGINATED: | SCALE: NTS

CHECKED: REE

APPROVED: GRANT STACY | REV. E | SHT. 1/1

CU	CU DESCRIPTION

SL21_70B	Glare shield (Back) for 70W & 125W SL				
ITEM NUMBER	STOCK CODE	DESCRIPTION	QTY	UNIT OF MEASURE	REMARKS
1	HL0592	Glare shield (Back) for 70W & 125W Urban	1	ea	Fits HL6140, HL6143, HL6147

SL21_70FB	Glare shield (Front & Back) for 70W & 125W SL				
ITEM NUMBER	STOCK CODE	DESCRIPTION	QTY	UNIT OF MEASURE	REMARKS
1	HL0593	Glare shield (Front & Back) for 70W & 125W Urban	1	ea	Fits HL6140, HL6143, HL6147

SL21_GRACE	Glare shield for RoadGrace LED				
ITEM NUMBER	STOCK CODE	DESCRIPTION	QTY	UNIT OF MEASURE	REMARKS
1	HL0740	Glare shield for RoadGrace luminaire	1	ea	Fits HL6300, HL6303, HL6306

SL21_FLR_4E	Glare shield (Back) for RoadFlair 80W LED and lower				
ITEM NUMBER	STOCK CODE	DESCRIPTION	QTY	UNIT OF MEASURE	REMARKS
1	HL0744	Glare shield for RoadFlair luminaire	1	ea	Fits HL6309, HL6310 & HL6600 to HL6610

SL21_FLR_5E	Glare shield (Back) for RoadFlair 135W to 160W LED				
ITEM NUMBER	STOCK CODE	DESCRIPTION	QTY	UNIT OF MEASURE	REMARKS
1	HL0745	Glare shield for RoadFlair luminaire	1	ea	Fits HL6312, HL6313 & HL6612, HL6613

SL21_FLR_6E	Glare shield (Back) for RoadFlair 155W to 170W LED				
ITEM NUMBER	STOCK CODE	DESCRIPTION	QTY	UNIT OF MEASURE	REMARKS
1	HL0747	Glare shield for RoadFlair luminaire	1	ea	Fits HL6315, HL6316 & HL6615, HL6616

CU	CU DESCRIPTION

SL21_RFP_BSP Glare shield (Back) for RoadFlair Pro small luminaire					
ITEM NUMBER	STOCK CODE	DESCRIPTION	QTY	UNIT OF MEASURE	REMARKS
4	HL0750	Glare shield for RoadFlair Pro (Signify) luminaire	1	ea	Fits HL6700

SL21_RFP_BMP Glare shield (Back) for RoadFlair Pro medium luminaire					
ITEM NUMBER	STOCK CODE	DESCRIPTION	QTY	UNIT OF MEASURE	REMARKS
4	HL0751	Glare shield for RoadFlair Pro (Signify) luminaire	1	ea	Fits HL6701 to HL6703

SL21_RFP_BMV Glare shield (Back) for RoadFlair Pro medium luminaire					
ITEM NUMBER	STOCK CODE	DESCRIPTION	QTY	UNIT OF MEASURE	REMARKS
4	HL0752	Glare shield for RoadFlair Pro (Signify) luminaire	1	ea	Fits HL6704 to HL6707

SL21_IM_BOF Glare shield (Back or Front) for IGNIS Mini					
ITEM NUMBER	STOCK CODE	DESCRIPTION	QTY	UNIT OF MEASURE	REMARKS
5	HL0760	16mm glare shield for IGNIS Mini (OrangeTek) luminaire	1	ea	Fits HL6801 to HL6803

SL21_IM_BNF Glare shield (Back & Front) for IGNIS Mini					
ITEM NUMBER	STOCK CODE	DESCRIPTION	QTY	UNIT OF MEASURE	REMARKS
5	HL0761	16mm glare shield for IGNIS Mini (OrangeTek) luminaire	1	ea	Fits HL6801 to HL6803

SL21_IM_AA Glare shield (All around) for IGNIS Mini					
ITEM NUMBER	STOCK CODE	DESCRIPTION	QTY	UNIT OF MEASURE	REMARKS
5	HL0762	50mm glare shield for IGNIS Mini (OrangeTek) luminaire	1	ea	Fits HL6801 to HL6803

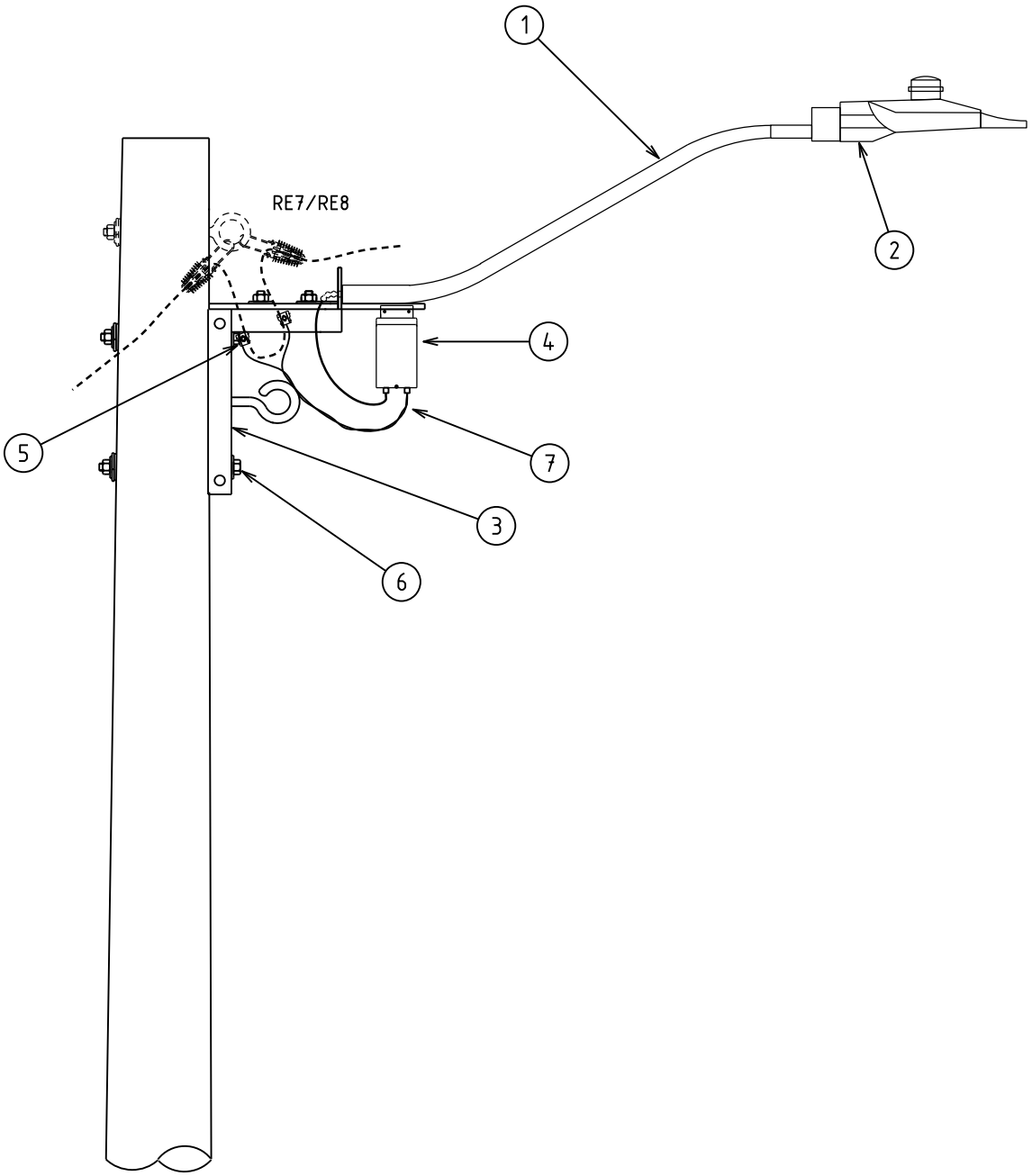

NOTES:
1. IF ARTERIAL LIGHTING IS TO BE FITTED TO MINOR ROAD LAYOUT REFER TO SL18 FOR BRACKETS.
2. REMOVE MINOR ROAD LUMINAIRE AND REPLACE WITH ARTERIAL ROAD LUMINAIRE REQUIREMENT.

REV.	DATE	DESCRIPTION	ORGD.	CHKD.	APRD.
D	19.11.26	UPDATED LED HEAD SHAPE FOR NEW LUMINAIRE RANGE	ML	VAS	CO
C	21.07.21	LED LUMINAIRE TYPE CHANGED	REE	CO	FK
B	17.08.18	LED LUMINAIRE ADDED	REE	JC	FK
A	08.08.01	ORIGINAL ISSUE			

COMPATIBLE UNIT

MINOR ROAD BRACKET
WOOD POLE WITHOUT CROSSARM

DISTRIBUTION DESIGN CATALOGUE

westernpower

DRAWN: JRR	DATE: 22-04-2014	DRG. No. SL23
ORIGINATED:	SCALE: NTS	
CHECKED: REE		
APPROVED: GRANT STACY		REV. D / SHT. 1/1

CU	CU DESCRIPTION

SL23_S1	Minor road bracket on wood pole without xarm				
ITEM NUMBER	STOCK CODE	DESCRIPTION	QTY	UNIT OF MEASURE	REMARKS
1	CB0424	Bracket	1		
2	HL6700	15W LED Luminaire with 8m cable	1		
2	HL5557	NEMA base PE Cell	1		
3	CB3020	Universal bracket with nuts and bolts	1		
4	GF1804	Fuse holder with no fuse	1		
4	GF0925	10amp fuse	1		
5	CC0063	IPC - 16mm XLPE to 4mm conductor	2		
6	AB6732	Pole bolt - 16 dia x 550lg with nuts& Washers	2		
7	EE1120	6mm copper xlpe	1	meters	

SL23_S2	Minor road bracket on wood pole without xarm				
ITEM NUMBER	STOCK CODE	DESCRIPTION	QTY	UNIT OF MEASURE	REMARKS
1	CB0424	Bracket	1		
2	HL6803	29W LED Luminaire with 8m cable	1		
2	HL5557	NEMA base PE Cell	1		
3	CB3020	Universal bracket with nuts and bolts	1		
4	GF1804	Fuse holder with no fuse	1		
4	GF0925	10amp fuse	1		
5	CC0063	IPC - 16mm XLPE to 4mm conductor	2		
6	AB6732	Pole bolt - 16 dia x 550lg with nuts& Washers	2		
7	EE1120	6mm copper xlpe	1	meters	

SL23_S3	Minor road bracket on wood pole without xarm				
ITEM NUMBER	STOCK CODE	DESCRIPTION	QTY	UNIT OF MEASURE	REMARKS
1	CB0424	Bracket	1		
2	HL6802	33W LED Luminaire with 8m cable	1		
2	HL5557	NEMA base PE Cell	1		
3	CB3020	Universal bracket with nuts and bolts	1		
4	GF1804	Fuse holder with no fuse	1		
4	GF0925	10amp fuse	1		
5	CC0063	IPC - 16mm XLPE to 4mm conductor	2		
6	AB6732	Pole bolt - 16 dia x 550lg with nuts& Washers	2		
7	EE1120	6mm copper xlpe	1	meters	

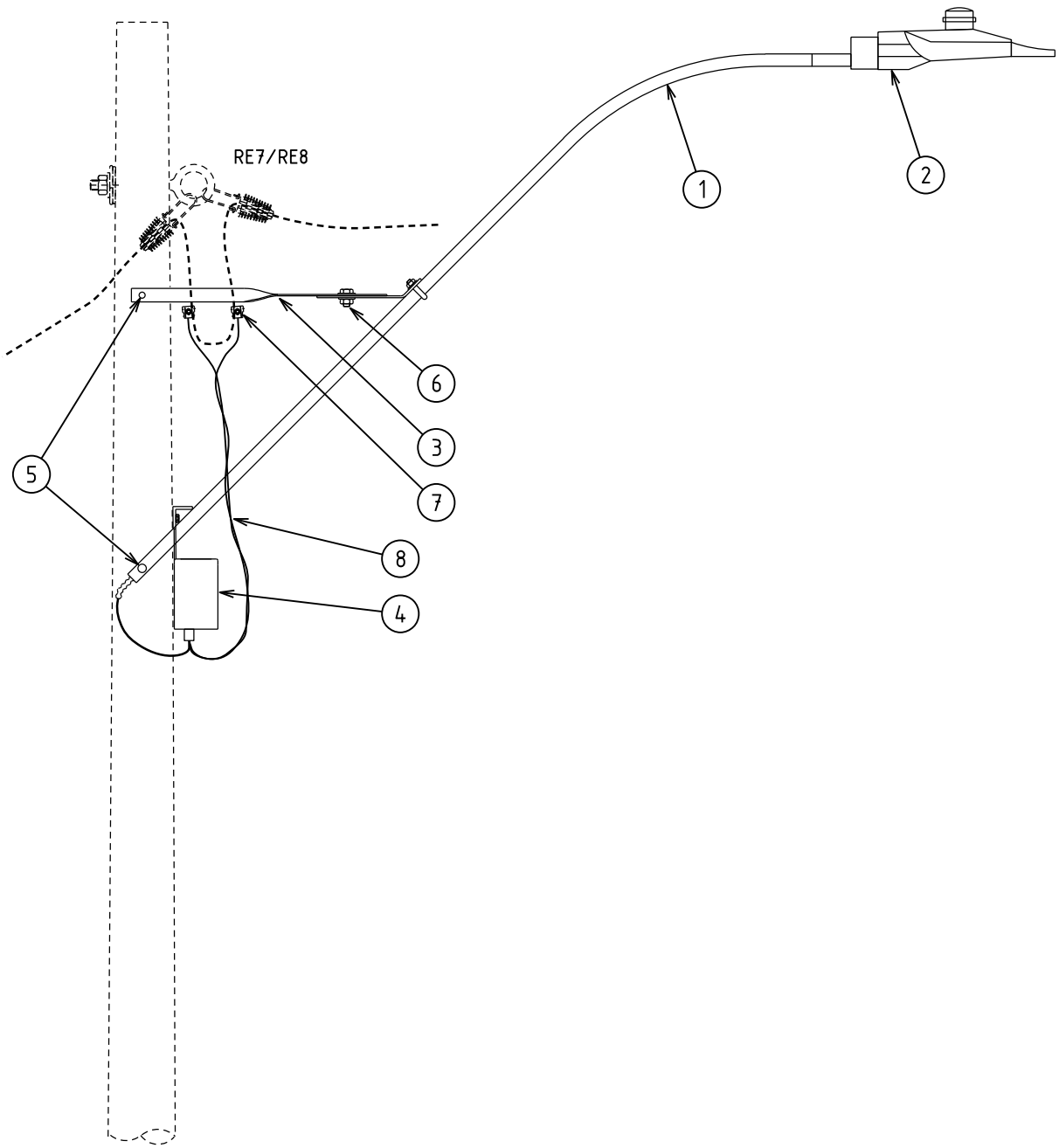

NOTES:
1. IF MINOR ROAD LIGHTING IS TO BE FITTED TO ARTERIAL ROAD LAYOUT REFER TO SL18 FOR BRACKETS.
2. REMOVE ARTERIAL ROAD LUMINAIRE AND REPLACE WITH MINOR ROAD LUMINAIRE REQUIREMENT.

REV.	DATE	DESCRIPTION	DRGD.	CHKD.	APRD.
C	19.11.26	UPDATED LED HEAD SHAPE FOR NEW LUMINAIRE RANGE	ML	VAS	CO
B	17.08.18	LED LUMINAIRE ADDED	REE	JC	FK
A	22.04.13	ORIGINAL ISSUE			

COMPATIBLE UNIT

ARTERIAL ROAD BRACKET WOOD POLE WITHOUT CROSSARM

DISTRIBUTION DESIGN CATALOGUE

westernpower

DRAWN: JRR | DATE: 22-04-2014 | DRG. No. SL24

ORIGINATED: | SCALE: NTS

CHECKED: REE

APPROVED: GRANT STACY | REV. C | SHT. 1/1

CU	CU DESCRIPTION

SL24_S4	Arterial road bracket on wood pole without xarm				
ITEM NUMBER	STOCK CODE	DESCRIPTION	QTY	UNIT OF MEASURE	REMARKS
1	CB0278	Bracket with nuts and bolts	1		
2	HL6704	59W LED Luminaire with 15m cable	1		
2	HL5557	NEMA base PE Cell	1		
3	CB0548	Twisted racket	2		
4	GF1804	Fuse holder with no fuse	1		
4	GF0925	10amp fuse	1		
5	AB6741	Pole bolt - 12 dia supplied with nuts& Washers	2		
6	AB4551	12 dia bolt 40 long with nut	1		
7	CC0063	IPC - 16mm XLPE to 4mm conductor	2		
8	EE1120	6mm copper xlpe	2	meters	

SL24_S5	Arterial road bracket on wood pole without xarm				
ITEM NUMBER	STOCK CODE	DESCRIPTION	QTY	UNIT OF MEASURE	REMARKS
1	CB0278	Bracket with nuts and bolts	1		
2	HL6705	122W LED Luminaire with 15m cable	1		
2	HL5557	NEMA base PE Cell	1		
3	CB0548	Twisted racket	2		
4	GF1804	Fuse holder with no fuse	1		
4	GF0925	10amp fuse	1		
5	AB6741	Pole bolt - 12 dia supplied with nuts& Washers	2		
6	AB4551	12 dia bolt 40 long with nut	1		
7	CC0063	IPC - 16mm XLPE to 4mm conductor	2		
8	EE1120	6mm copper xlpe	2	meters	

CU	CU DESCRIPTION

SL24_S6	Arterial road bracket on wood pole without xarm				
ITEM NUMBER	STOCK CODE	DESCRIPTION	QTY	UNIT OF MEASURE	REMARKS
1	CB0278	Bracket with nuts and bolts	1		
2	HL6707	143W LED Luminaire with 15m cable	1		
2	HL5557	NEMA base PE Cell	1		
3	CB0548	Twisted racket	2		
4	GF1804	Fuse holder with no fuse	1		
4	GF0925	10amp fuse	1		
5	AB6741	Pole bolt - 12 dia supplied with nuts& Washers	2		
6	AB4551	12 dia bolt 40 long with nut	1		
7	CC0063	IPC - 16mm XLPE to 4mm conductor	2		
8	EE1120	6mm copper xlpe	2	meters	