Western Power's
Asset Management System

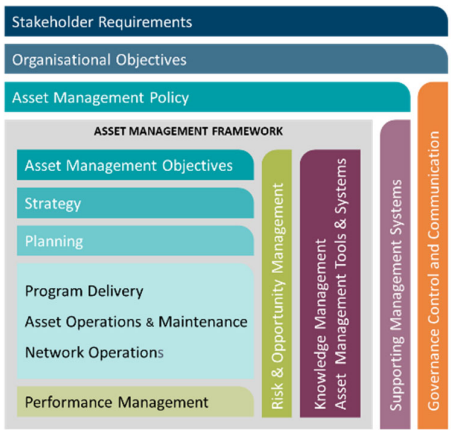

Distribution Construction Standard Handbook High Voltage Overhead Part 04 (H)

Original Issue: August 2008

Content Owner/Custodian: Distribution Design and Standards

This Revision: November 2026

Date for Next Review: May 2028

© Western Power
ABN 18540492861

Uncontrolled document when printed. Printed copy expires one week from print date.

Volt ID ID-005-27b2b2920b6bbea7929293d5095fd0dc

Document control

Endorsement approvals

	Name	Title	Signature and Date
Compiled by	Nory Cerrado	Distribution Draftsperson	Signature on file
Checked by	Chris Omodei	Principal Engineer	Signature on file
Endorsed by	Ken Tiong	Team Leader	Signature on file
Approved by	Pep Ngwenya	Distribution Design & Standards Manager	Signature on file

Record of revisions

Revision No.	Date	Version	Compiled by	Description
1	09/05/2025	EDM 51	Nory Cerrado	First Revision with new Format and 3 yearly review
2	14/07/2025	Volt 52	Nory Cerrado	Refer to Amendment List
3	22/12/2025	Volt 54	Nory Cerrado	Refer to Amendment List
4	25/05/2026	Volt 55	Nory Cerrado	Refer to Amendment List
5	27/05/2026	Volt 56	Nory Cerrado	General Notes Updated Refer to Amendment List
6	09/11/2026	Volt 57	Nory Cerrado	Refer to Amendment List

This document gives direction to and influences the following documents.

Doc	Title of document
ALL CHAPTERS	DDC - DISTRIBUTION DESIGN CATALOGUE
ALL CHAPTERS	DCSH - DISTRIBUTION CONSTRUCTION STANDARD HANDBOOK
ALL CHAPTERS	DSPM - DISTRIBUTION SUBSTATION PLANT MANUAL

Stakeholders (people that were consulted when document was updated)

Business Unit / Function
Asset Management - Asset Performance
Asset Management – Safety Environment Quality and Training
Asset Management - Grid Transformation
Asset Operations – Network Operations
Asset Operations – Operational Services
Asset Operations – Customer Connection Services
Business and Customer Service – Customer Service

Notification list (people to be notified when document is updated)

Business Unit / Function
Asset Management - Asset Performance
Asset Management – Safety Environment Quality and Training

Asset Management - Grid Transformation
Asset Operations – Network Operations
Asset Operations – Operational Services
Asset Operations – Customer Connection Services
Business and Customer Service – Customer Service

This document must not be made available to personnel outside Western Power without the prior written approval of Western Power.

Document classification and hierarchy

A key requirement of the Western Power Asset Management Policy (AMP) is to develop and maintain an Asset Management System (AMS). This Distribution Substation Plant Manual is defined as a technical document within the AMS document classification and structure and sits within the planning and Program Delivery components of the AMS.

The AMS and the interrelationships between the collection of documents, tools and systems that are used for asset management are described in the AMS document AMS document Volt ID

ID-005-dc7f342fed83eb7f008777ff0463b876.

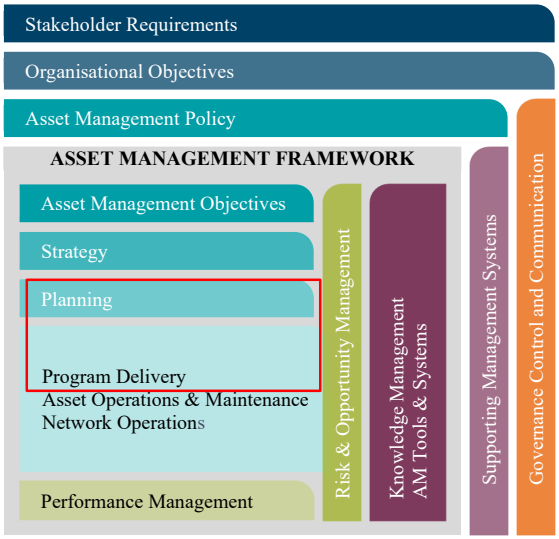

General Notes

1. Clearances of conductors from ground, other structures and other conductors shall be undertaken in accordance with Western Power's Overhead Line Design Standard.

2. Pole strength and height selections for poles without pole top plant shall be undertaken in accordance with Western Power's Overhead Line Design Standard.

   As a minimum, the following rules apply when selecting pole strengths with pole top plant, unless stated otherwise under the specific DCSH references:

   a. For 315kVA Pole Top Transformers: use 8kN poles

   b. For single phase Pole Top Transformers: use 4kN poles as minimum

   c. For all other pole top plant and pole top switches: use 6kN poles as a minimum

   When pole mounted equipment (e.g. transformers, reclosers, etc.) is installed, taller poles may be required to maintain clearances.

3. Western Power will meet the pole top earthing requirements of AS2067 clause B1.3 (a) by earthing all HV crossarms, metallic HV terminations and stays on HV structures. This requirement has been detailed in the relevant DCSH drawings.

© Copyright of Western Power

Any use of this material except in accordance with a written agreement with Western Power is prohibited.

Drawing Register

Number	Revision	DESCRIPTION
H01-1	K	3 PHASE INTERMEDIATE
H01-3	M	3 PHASE INTERMEDIATE ANTI-SWAN CROSSARM GUIDE
H01-4	D	3 PHASE INTERMEDIATE DOUBLE CROSS-ARM
H02-1	F	3 PH INTERMEDIATE SINGLE PHASE TEE-OFF WITH/WITHOUT DOF
H02-2	B	3 PH INTERMEDIATE SINGLE PHASE TEE-OFF WITH/WITHOUT DOF ALT. MAIN RE
H03	F	4 WAY INTERMEDIATE
H04-1	J	HORIZONTAL TERMINATION
H04-2	D	HORIZONTAL TERMINATION – ANTI-SWAN CROSS-ARM
H04-3	C	DOUBLE TERMINATION AND 1 PH T-OFF WITH DOF
H05-1	G	STRAIN ANGLE WITH OR WITHOUT DROPOUT FUSE
H05-2	E	STRAIN ANGLE UPTO 30° DEVIATION - DOUBLE ANTI-SWAN CROSS-ARM
H05-3	C	STRAIN ANGLE DOUBLE ANTI SWAN CROSS-ARM – LONG BAY
H05-4	A	3Φ x 3 POLE LONG BAY SOLUTION FOR ANGLE DEVIATION UP TO 45°
H05-5	A	3PH IN-LINE STRAIN WITH TEE OFF
H06	L	RUNNING DISC ANGLE OR VERTICAL TERMINATION (900mm SPACING)
H07	H	RUNNING DISC ANGLE OR VERTICAL TERMINATION (1200mm SPACING)
H08-1	C	INTERMEDIATE CABLE WITH DROPOUT FUSES
H08-2	D	INTERMEDIATE CABLE WITH DROPOUT FUSES (ALTERNATE CROSSARM)
H08-3	A	INTERMEDIATE CABLE WITHOUT DROPOUT FUSES
H09-1	G	TERMINATION CABLE WITH DROPOUT FUSES UPSTREAM
H09-2	E	TERMINATION & CABLE WITH DROPOUT FUSES
H09-3	C	3 PHASE TERMINATION & CABLE WITH FUSED SINGLE-PHASE TEE-OFF
H09-4	A	TERMINATION CABLE SINGLE PHASE TX AND DOF
H10-1	L	INTERMEDIATE TRANSFORMER HV TO OPEN AERIAL
H10-2	N	INTERMEDIATE TRANSFORMER HV TO ABC
H11-1	K	IN-LINE TERMINATION TRANSFORMER
H11-2	I	SIDE MOUNTED TERMINATION TRANSFORMER WITH DROPOUT FUSES
H11-3	D	SIDE MOUNTED TERMINATION TRANSFORMER STRAIN
H12	E	POLE TOP SWITCH INCLUDING EARTH
H13-1	F	TEE-OFF WITH DROPOUT FUSES
H13-2	C	TEE-OFF WITHOUT DROPOUT FUSES
H14-1	C	COMBINATION SWITCH & FUSE WITH RAISER (FLY-OVER SWITCH)
H14-2	B	COMBINATION SWITCH & FUSE
H14-3	D	PTS & FUSES/ISOLATORS LAYOUT FOR 2 CABLES
H17-4	D	TRANSFORMER CABLE SUPPLIED
H18	E	TERMINATION POLE TOP SWITCH WITH CABLE AND DROPOUT FUSE
H19	E	TERMINATION POLE TOP SWITCH WITH CABLE ARRANGEMENT
H20-1	E	ISOLATION TRANSFORMER
H20-2	F	ISOLATION TRANSFORMER 3PH TERMINATION 1PH IN-LINE WITHOUT 1PH DROPOUT FUSE
H20-3	E	ISOLATION TRANSFORMER 3PH TERMINATION 1PH IN-LINE WITH DROPOUT FUSE
H20-4	E	ISOLATION TRANSFORMER 3PH TERMINATION 1PH IN-LINE WITH/WITHOUT DROPOUT FUSE

Number	Revision	DESCRIPTION
H20-5	G	ISOLATION TRANSFORMER 3PH CABLE/1PH TEE-OFF WITH DROPOUT FUSE/LINK
H20-6	F	ISOLATION TRANSFORMER 3PH IN-LINE/1PH TEE-OFF WITHOUT DROPOUT FUSE
H20-7	E	ISOLATION TRANSFORMER 3PH TERMINATION/1PH CABLE WITH DROP OUT FUSE
H21	F	METERING TRANSFORMER
H22	D	INTERMEDIATE WISHBONE WITH OVERHEAD EARTHWIRE
H23	C	INTERMEDIATE FLAT CONSTRUCTION WITH OVERHEAD EARTHWIRE
H24	E	TERMINATION TRANSFORMER WITH OVERHEAD EARTHWIRE
H25	C	INTERMEDIATE TRANSFORMER WISHBONE CONSTRUCTION
H26-1	C	VERTICAL STRAIN
H26-2	A	INLINE STRAIN WITH OVER HEAD EARTH WIRE
H27	B	WISHBONE CONSTRUCTION WITH TEE-OFF
H28	B	VERTICAL STRAIN ANGLE
H29-1	C	FAULT INDICATOR LV AERIAL SUPPLY ARRANGEMENT
H30	C	SURGE ARRESTER STANDARD LINE INSTALLATION
H31	G	22kV CAPACITOR BANK WITH 10 kVA TRANSFORMER (SINGLE/DOUBLE BUSHING)
H32	I	33kV CAP BANK WITH SWITCH AND 10kVA OR 25kVA TRANSFORMER (SINGLE/TWO BUSHING) CONNECTION DETAILS
H33-1	D	IN-LINE LAYOUT TYPE GE VR-1 50A-100A DETAILS
H33-2	D	IN-LINE DETAIL TYPE GE VR-1 50A-100A CONSTRUCTION DETAIL
H33-3	B	OFFSET DETAIL TYPE GE VR-1 50A-100A ARRANGEMENT
H33-4	B	OFFSET DETAIL TYPE GE VR-1 50A-100A CONSTRUCTION DETAIL
H34	B	SHUNT REACTOR
H40-1	F	INTERMEDIATE
H41-1	B	RUNNING DISC OR TERMINATION WITH / WITHOUT TERMINATION
H41-2	D	SINGLE PHASE STRAIN ANGLE
H42-1	C	SINGLE PHASE TEE-OFF TO STRAIN WITH OR WITHOUT DROPOUT FUSE
H42-2	B	INTERMEDIATE WITH CABLE TERMINATION
H43	D	TEE OFF WITHOUT DROPOUT FUSE
H44-1	E	DOUBLE TERMINATION
H44-2	B	TRIPLE TERMINATION
H46-1	J	SINGLE PHASE NETWORK INTERMEDIATE TRANSFORMER WITH OR WITHOUT DROPOUT FUSE
H46-2	B	3 PHASE NO RE OR 3 PHASE NETWORK AND 2 PHASE TRANSFORMER WITH DROPOUT FUSE
H47-1	G	SINGLE PHASE NETWORK AND TERMINATION TRANSFORMER WITH OR WITHOUT DROPOUT FUSE
H47-2	H	3 PHASE WITH RE NETWORK AND 1 PHASE TRANSFORMER WITH DROPOUT FUSE
H47-3	D	SINGLE PHASE NETWORK DOUBLE TERMINATION AND TRANSFORMER WITHOUT DROPOUT FUSE
H47-4	B	SINGLE PHASE NETWORK WITH CABLE TERMINATION AND TRANSFORMER WITH OR WITHOUT DROPOUT FUSE
H48-1	H	SINGLE PHASE TRANSFORMER MOUNTING FOR TWIN, TRIPLE OR QUAD ARRANGEMENT
H48-2	C	SINGLE PHASE 2 BUSHING TRANSFORMER MOUNTING FOR VERTICAL ARRANGEMENT
H49	C	EARTH & LV PHASE CONNECTIONS

Number	Revision	DESCRIPTION
H50	C	EARTH & LV PHASE CONNECTIONS THREE & FOUR TRANSFORMERS SETUP
H52-1	B	DOWN EARTH – RUNNING EARTH
H52-2	A	EXTENDED OR REMOTE DOWN EARTH – RUNNING EARTH
H53	B	1 PHASE IN-LINE STRAIN WITH SECTIONALISER & BY-PASS FUSE
H61-1	H	POLE MOUNTED 3 PH RECLOSER / LOAD BREAK SWITCH WITH BY-PASS SWITCH
H61-2	G	POLE MOUNTED 3 PH RECLOSER / LOAD BREAK SWITCH WITH BY-PASS SWITCH (AERIAL LV SUPPLY)
H63	F	1 PHASE RECLOSER / LOAD BREAK SWITCH BY-PASS ISOLATORS/STRAIN TERMINATION WITH SINGLE PHASE TX SUPPLY

	Drawings	HV HENDRIX
H100	E	INTERMEDIATE POLE 0 - 2 DEGREES
H101	D	INTERMEDIATE ANGLE POLE 2 – 30 DEGREES
H102	C	INTERMEDIATE ANGLE POLE 31 – 60 DEGREES
H103	D	DOUBLE TERMINATION 61 – 90 DEGREES
H104	B	TERMINATION POLE FOR CABLE CONNECTION
H105	D	INTERMEDIATE TEE-OFF FROM EXISTING COVERED CONDUCTOR WITH DOF DRILLING DETAILS
H106	E	INTERMEDIATE TEE-OFF FROM EXISTING BARE CONDUCTOR WITH D.O.F DRILLING DETAILS
H107	D	INTERMEDIATE POLE CROSSING
H108-1	B	OPEN AERIAL TO COVERED CONDUCTOR WITH SURGE ARRESTERS
H108-2	C	STRAIN COVERED CONDUCTOR WITH SURGE ARRESTERS
H109	E	PTS COVERED CONDUCTOR TERMINATED MESSENGER WIRE
H110	E	PTS COVERED CONDUCTOR TO OPEN AERIAL
H111	G	INTERMEDIATE TRANSFORMER COVERED CONDUCTOR
H112	G	TERMINATION TRANSFORMER WITH DROP OUT FUSE

HV BARE

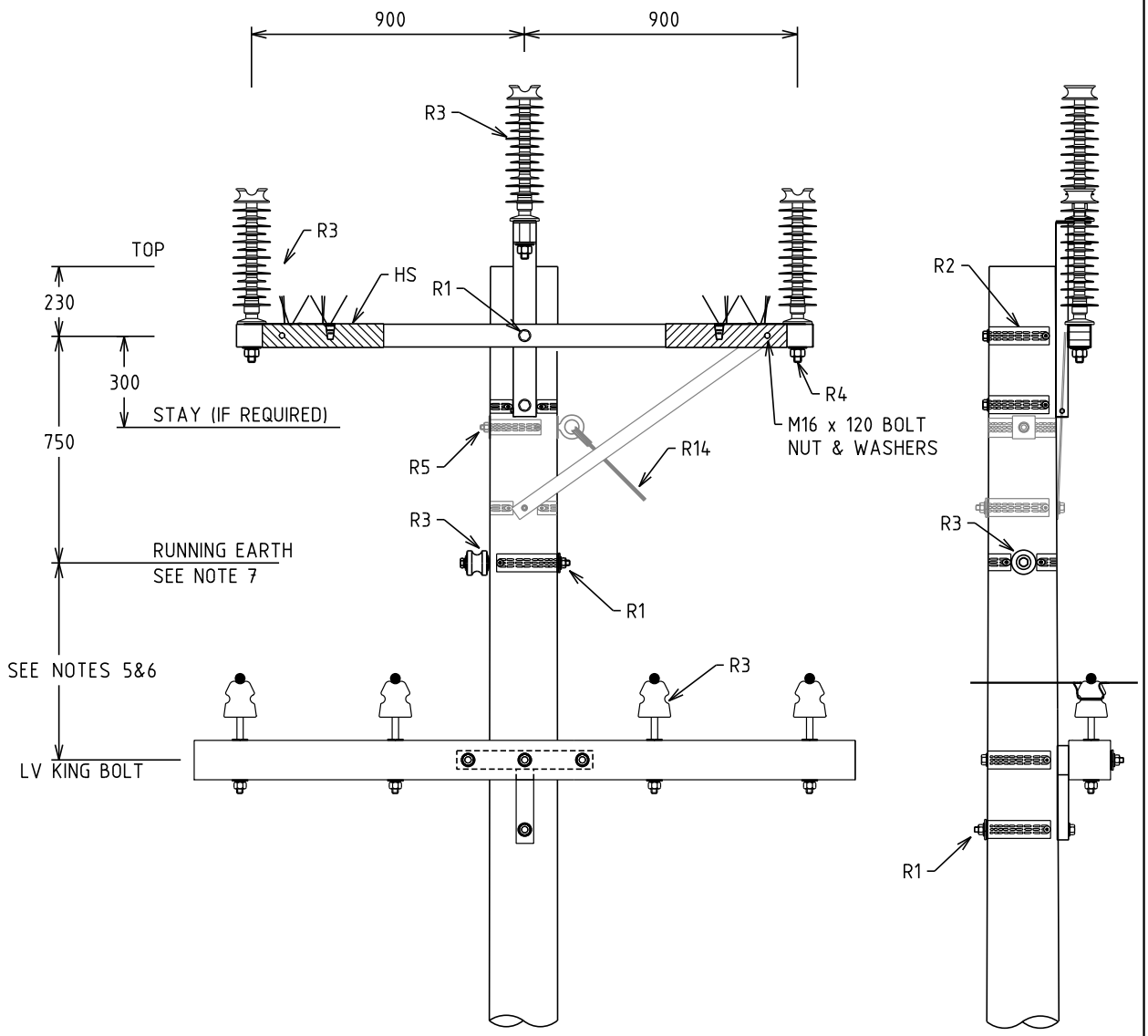

NOTES:
1. ALL DIMENSIONS ARE IN MILLIMETRES.
2. ALL HOLES 18Ø U.O.N.
3. MAXIMUM DISTANCE BETWEEN DOWNEARTHS
   WHEN RUNNING EARTH PRESENT = 600m
4. USE CROSSARM STRAP (HV1-CS) IF DEVIATION IS >10°
5. WHEN LV CONDUCTOR IS;
   (a) LV BARE CONDUCTOR -
       650 IF R/E IS SCAC OR SCGZ
       1100 IF R/E IS AAAC.
   (b) LV ABC
       450 FOR ALL TYPES OF R/E CONDUCTOR
6. IF THERE IS NO RUNNING EARTH THIS DISTANCE IS 450.
7. USE RUNNING EARTH INTERMEDIATE ANGLE, IF DEVIATION IS >2°.
8. IF LV DEVIATION IS >2° REFER TO DWG. L02.

REV.	DATE	DESCRIPTION	ORGD.	CHKD.	APRD.
K	12.10.26	R3 UPDATED	NMc	NG	CO
J	26.09.24	PLACE NOTE 4 FOR THE CROSSARM IN DRAWING	JG	VS	CO
I	11.01.09	NOTE REGARDING TWO PHASE CONSTRUCTION DELETED	NC	REE	GS
H	13.09.17	NOTE 9 ADDED	JB	NMc	GS
G	16.06.17	DRAWINGS H01-1 & H01-2 COMBINED	GS	NMc	GS
F	24.09.14	NOTE 6 REVISED AND NOTE 7 ADDED			

STRUCTURE

TITLE

3 PHASE INTERMEDIATE

DISTRIBUTION CONSTRN. STANDARD

westernpower

DRAWN: JRR | DATE: 01-04-2014 | DRG. No. H01-1

ORIGINATED: | SCALE: NTS

CHECKED: REE

APPROVED: GRANT STACY | REV. K | SHT. 1/1

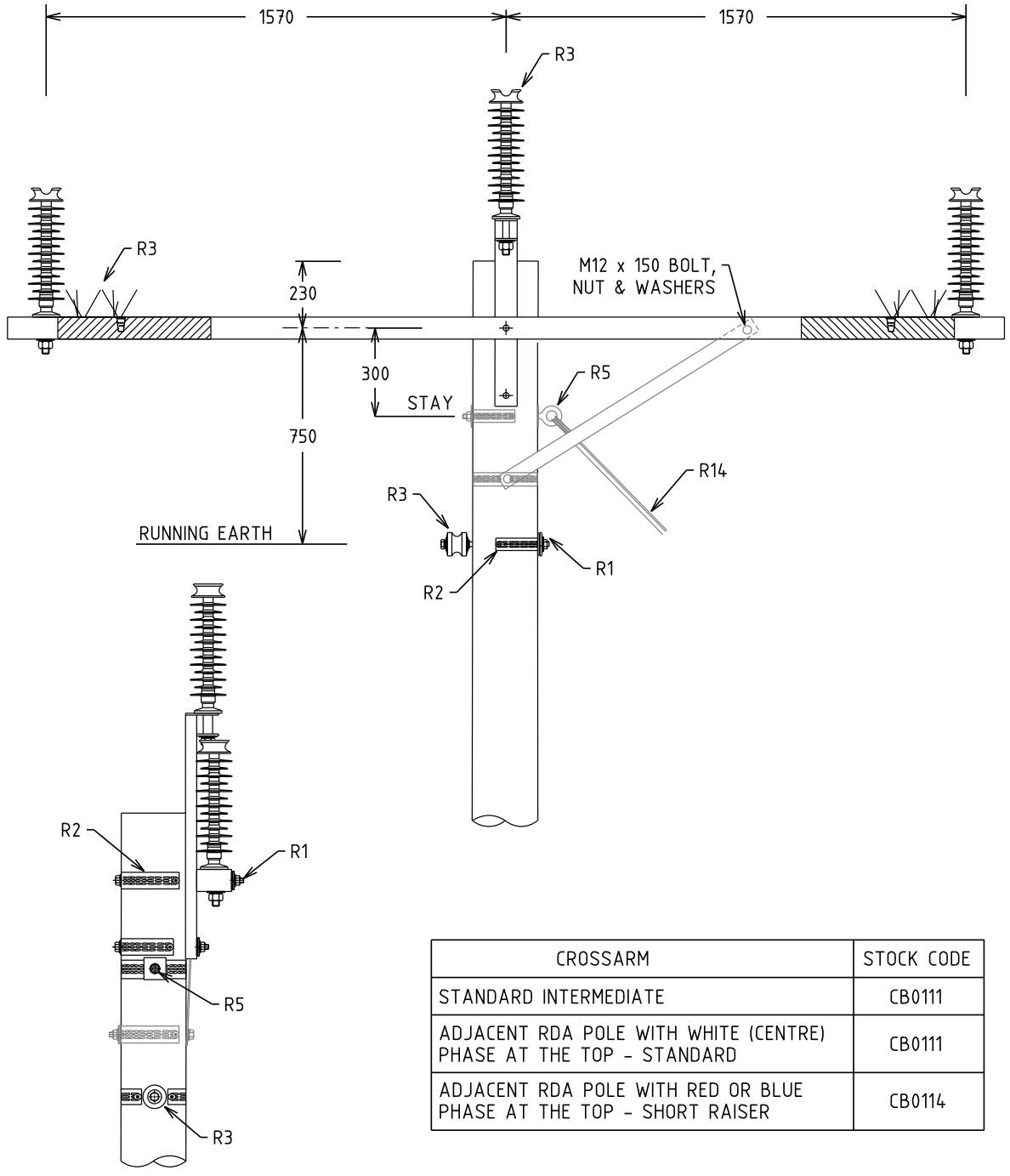

CROSSARM	STOCK CODE
STANDARD INTERMEDIATE	CB0111
ADJACENT RDA POLE WITH WHITE (CENTRE) PHASE AT THE TOP - STANDARD	CB0111
ADJACENT RDA POLE WITH RED OR BLUE PHASE AT THE TOP - SHORT RAISER	CB0114

NOTES:
1. ALL DIMENSIONS ARE IN MILLIMETRES.
2. ALL HOLES 18Ø U.O.N.
3. MAXIMUM DISTANCE BETWEEN DOWNEARTHS = 600m.
4. USE CROSSARM STRAP (CB0485) IF DEVIATION IS >10°.

REV.	DATE	DESCRIPTION	ORGD.	CHKD.	APRD.
M	13.10.26	R3 & R5 UPDATED	NMc	NG	CO
L	11.01.19	NOTE ABOUT TWO PHASE CONSTRUCTION DELETED	NC	REE	GS
K	09.01.18	CROSSARM USE TABLE ADDED	CO	NMc	GS
J	24.09.14	NOTE 4 ADDED			GS
H	14.08.14	DISPERSION PLATE FOR CROSSARM STRAP ADDED			GS
G	07.07.14	DRAWING NUMBER CHANGED			GS

STRUCTURE

TITLE

3 PHASE INTERMEDIATE
ANTI-SWAN CROSSARM GUIDE

DISTRIBUTION CONSTRN. STANDARD

westernpower

DRAWN: JRR | DATE: 01-04-2014 | DRG. No. H01-3

ORIGINATED: | SCALE: NTS

CHECKED: REE

APPROVED: GRANT STACY | REV. M | SHT. 1/1

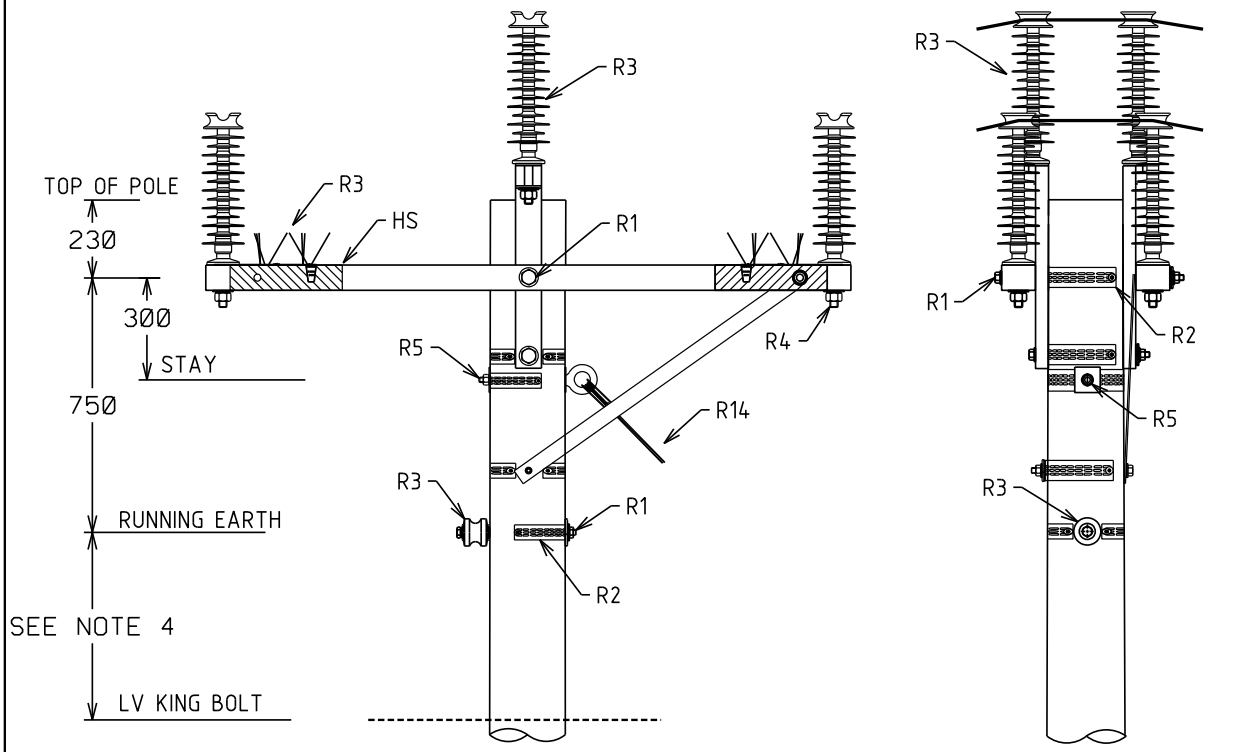

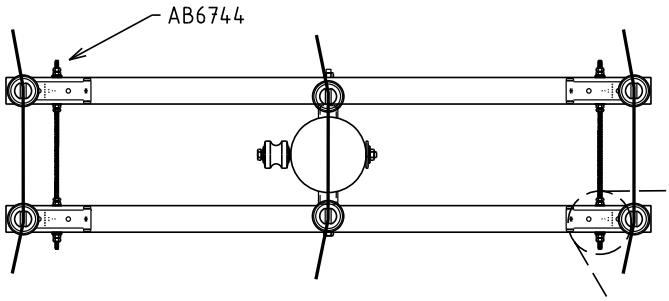

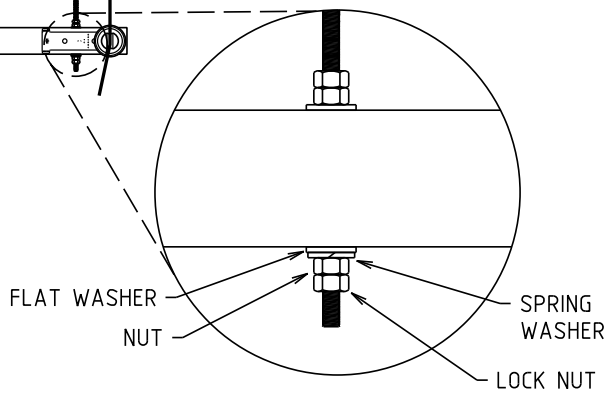

WILDLIFE DETERRENT OMITTED FOR CLARITY

NOTES:
1. ALL DIMENSIONS ARE IN MILLIMETRES.
2. ALL HOLES 18Ø U.O.N.
3. MAXIMUM DISTANCE BETWEEN DOWNEARTHS = 600m
4. REFER TO DWG. H01-1 NOTES FOR CLEARANCES BETWEEN RE & LV.
5. USE CROSSARM STRAP (HV1-CS) IF DEVIATION IS >10°

REV.	DATE	DESCRIPTION	ORGD.	CHKD.	APRD.
D	12.10.26	R3 UPDATED. NOTE 5 ADDED	NMc	NG	CO
C	21.05.25	ADDED STOCK CODES AB6744	VAS	NMc	CO
B	11.01.19	NOTE REGARDING TWO PHASE CONSTRUCTION DELETED	NC	REE	GS
A	05.05.16	ORIGINAL ISSUE	AT	FK	GS

STRUCTURE

TITLE: 3 PHASE INTERMEDIATE DOUBLE CROSS-ARM

DISTRIBUTION CONSTRN. STANDARD

westernpower

DRAWN: JRR | DATE: 12-02-2016 | DRG. No. H01-4

ORIGINATED: AT | SCALE: NTS

CHECKED: FK

APPROVED: GRANT STACY | REV. D | SHT. 1/1

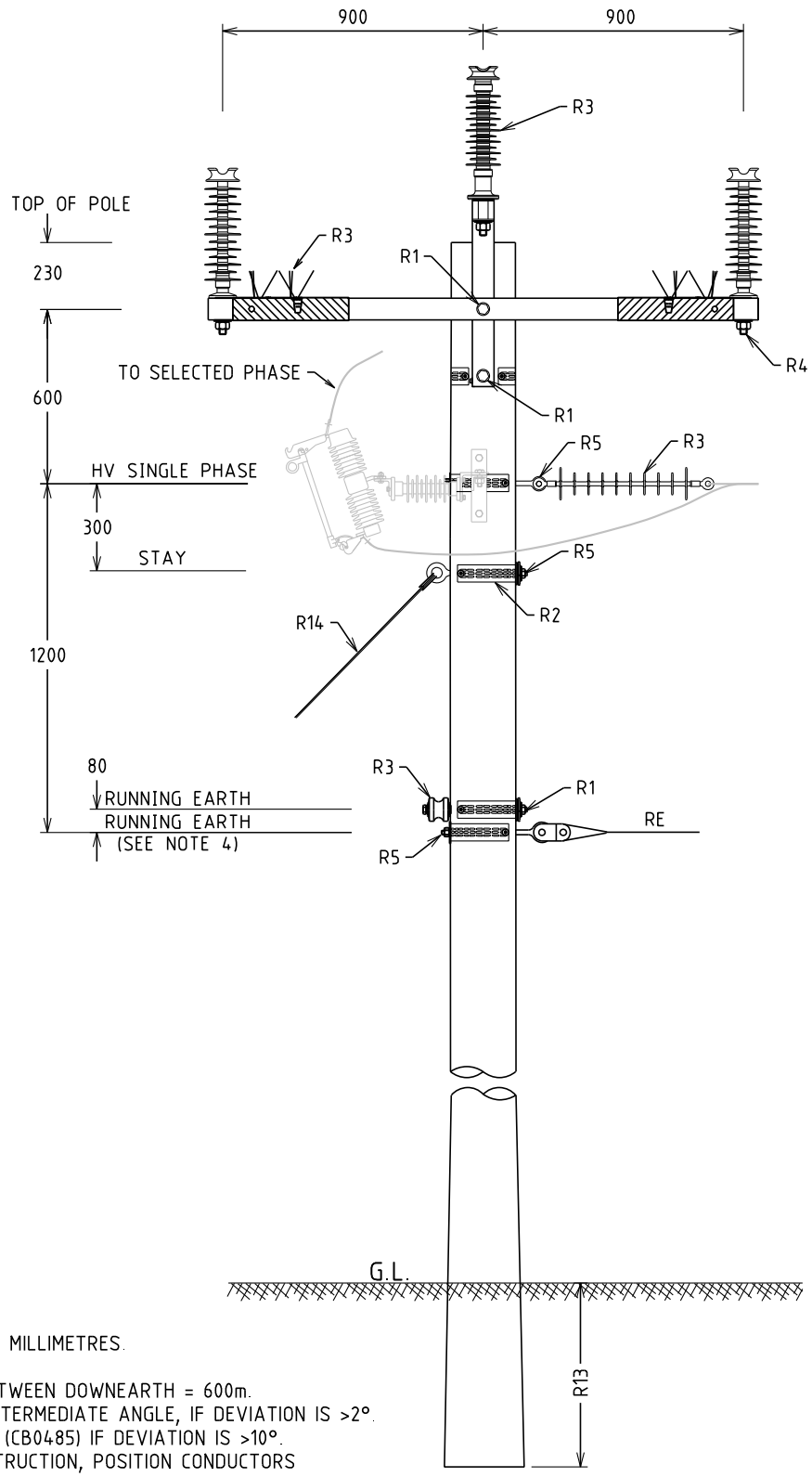

NOTES:
1. ALL DIMENSIONS ARE IN MILLIMETRES.
2. ALL HOLES 18Ø U.O.N.
3. MAXIMUM DISTANCE BETWEEN DOWNEARTH = 600m.
4. USE RUNNING EARTH INTERMEDIATE ANGLE, IF DEVIATION IS >2°.
5. USE CROSSARM STRAP (CB0485) IF DEVIATION IS >10°.
6. FOR TWO PHASE CONSTRUCTION, POSITION CONDUCTORS ON EITHER END OF CROSSARM.
7. TAPS NEED TO MAINTAIN 400 SEPERATION TO POLE.

REV.	DATE	DESCRIPTION	ORGD.	CHKD.	APRD
F	10.11.25	RE ATTACHMENT LOCATION UPDATED. R3 & R5 UPDATED	KT	VAS	CO
E	25.09.19	DRAWING NUMBER AND TEE-OFF DISTANCE CHANGED	NN	REE	GS
D	15.01.16	STAY & DOF ADDED AND TITLE REVISED	FK	ME	GS
C	12.01.15	FORMAT CHANGED, RUNNING EARTH AND NOTES REVISED	JC	REE	GS
B	09.10.12	ORIGINAL ISSUE			

TITLE: STRUCTURE
3 PHASE INTERMEDIATE
SINGLE PHASE TEE-OFF
WITH/WITHOUT DROPOUT FUSE

DISTRIBUTION CONSTRN. STANDARD
westernpower
DRAWN: JRR DATE: 10-03-2014
ORIGINATED: SCALE: NTS
CHECKED: REE
APPROVED: GRANT STACY
DRG. No. H02-1
REV. F SHT. 1/1

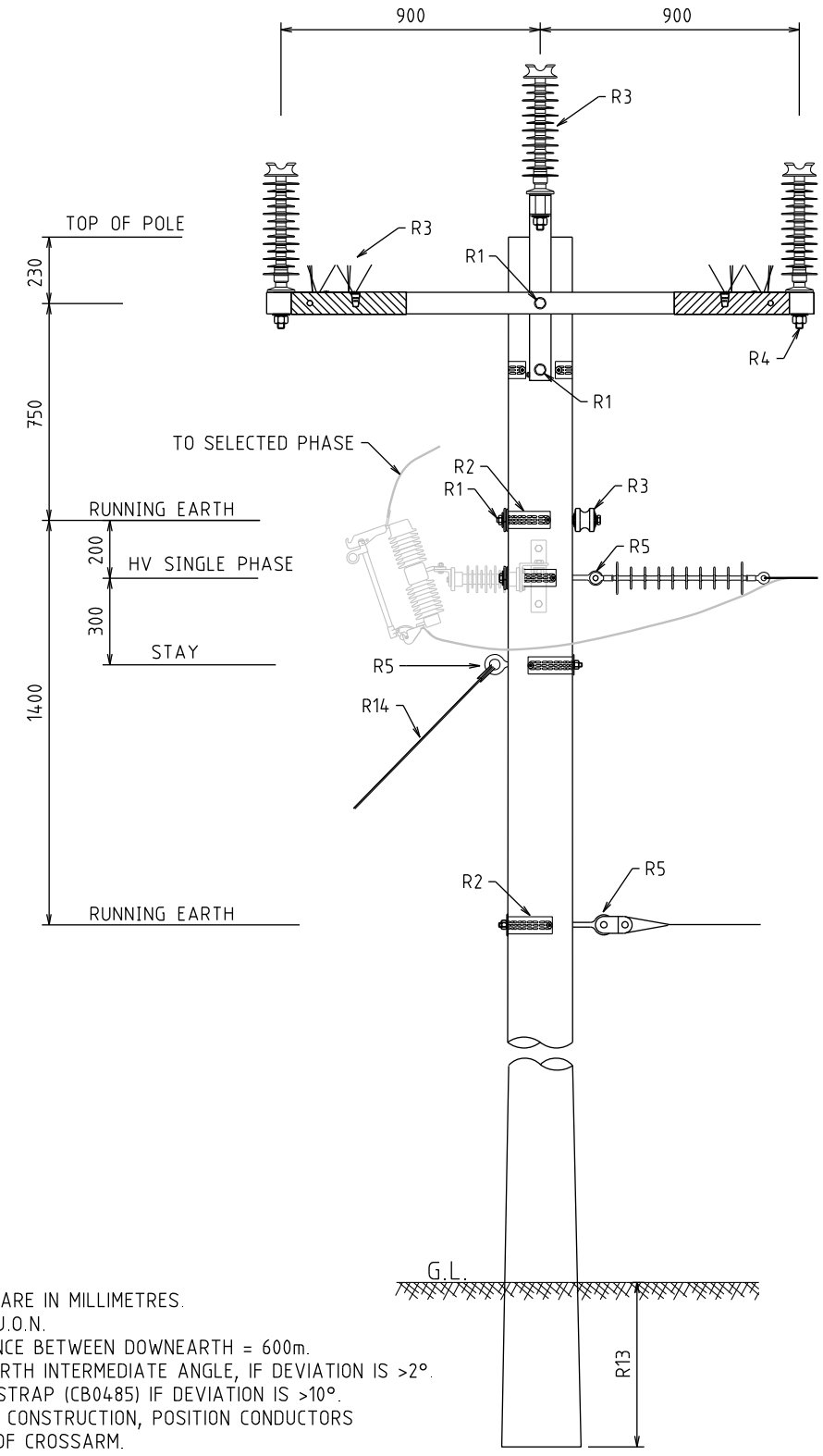

NOTES:
1. ALL DIMENSIONS ARE IN MILLIMETRES.
2. ALL HOLES 18Ø U.O.N.
3. MAXIMUM DISTANCE BETWEEN DOWNEARTH = 600m.
4. USE RUNNING EARTH INTERMEDIATE ANGLE, IF DEVIATION IS >2°.
5. USE CROSSARM STRAP (CB0485) IF DEVIATION IS >10°.
6. FOR TWO PHASE CONSTRUCTION, POSITION CONDUCTORS ON EITHER END OF CROSSARM.
7. TAPS NEED TO MAINTAIN 400 SEPERATION TO RUNNING EARTH OR POLE.

REV.	DATE	DESCRIPTION	ORGD.	CHKD.	APRD
B	10.11.25	RE ATTACHMENT LOCATION UPDATED. R3 & R5 UPDATED	KT	VAS	CO
A	25.09.19	ORIGINAL ISSUE	NN	CO	GS

STRUCTURE

TITLE: 3 PHASE INTERMEDIATE SINGLE PHASE TEE-OFF WITH/ WITHOUT DOF ALTERNATIVE MAIN RE

DISTRIBUTION CONSTRN. STANDARD

westernpower

DRAWN: JRR | DATE: 11-09-2019 | DRG. No. H02-2

ORIGINATED: NN | SCALE: NTS

CHECKED: REE

APPROVED: GRANT STACY | REV. B | SHT. 1/1

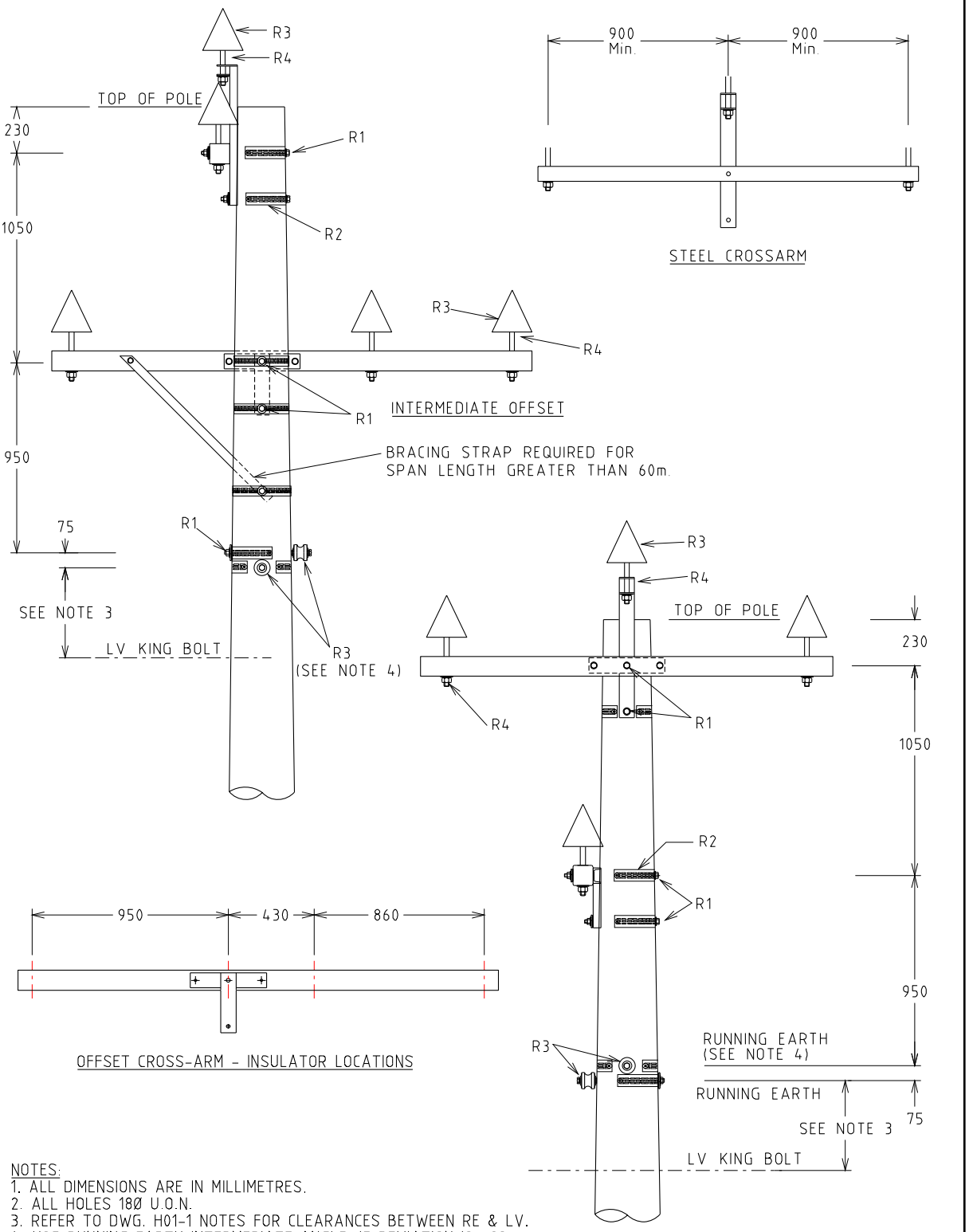

NOTES:
1. ALL DIMENSIONS ARE IN MILLIMETRES.
2. ALL HOLES 18Ø U.O.N.
3. REFER TO DWG. H01-1 NOTES FOR CLEARANCES BETWEEN RE & LV.
4. USE RUNNING EARTH INTERMEDIATE ANGLE, IF DEVIATION IS >2°.

REV	DATE	DESCRIPTION	ORGD.	CHKD.	APRD.
F	16.01.16	NOTE 4 ADDED	FK	ME	GS
E	15.09.14	NOTE 3 REVISED			GS
D	13.08.14	BRACING STRAP NOTE REVISED			GS
C	09.07.14	FORMAT CHANGED AND NOTE REVISED			GS
B	03.07.13	ORIGINAL ISSUE			

STRUCTURE

TITLE

4 WAY INTERMEDIATE

DISTRIBUTION CONSTRN. STANDARD

westernpower

DRAWN: JRR	DATE: 18-03-2014	DRG. No. H03
ORIGINATED:	SCALE: NTS	
CHECKED: REE		
APPROVED: GRANT STACY	REV. F	SHT.

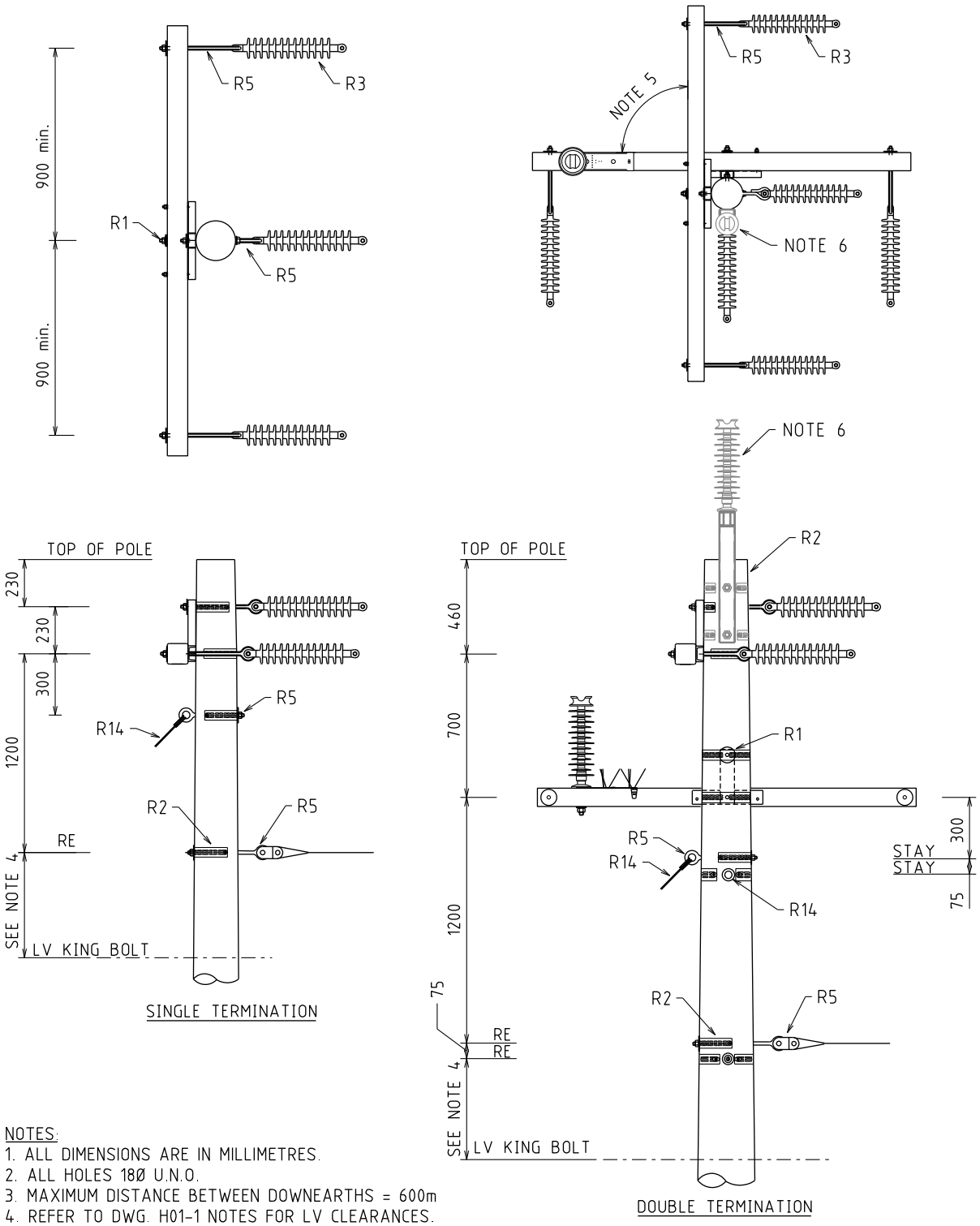

NOTES:
1. ALL DIMENSIONS ARE IN MILLIMETRES.
2. ALL HOLES 18Ø U.N.O.
3. MAXIMUM DISTANCE BETWEEN DOWNEARTHS = 600m
4. REFER TO DWG. H01-1 NOTES FOR LV CLEARANCES. IF NO R/E, 250.
5. RESTRICTED TO ANGLES >60° LINE DEVIATION, PROVIDED STAY CONFIGURATIONS ARE SATISFACTORY.
6. WHERE 400mm CLEARANCES TO THE CROSSARM/POLE CANNOT BE ACHIEVED, CARRY OVER INSULATORS TO BE USED (ON CROSSARM.)

REV.	DATE	DESCRIPTION	ORGD.	CHKD.	APRD
J	11.11.25	RE ATTACHMENT LOCATION UPDATED. R3 & R5 UPDATED	VAS	KT	CO
I	26.03.21	DISTANCE BETWEEN CROSS-ARMS INCREASED TO 700	NN	KT	GS
H	24.09.19	DISTANCE BETWEEN CROSSARMS IN DOUBLE TER. REVISED	NN		GS
G	19.12.17	NOTES REVISED	JC	REE	GS
F	09.03.17	DWG. No. CHANGED AND LV ATTACHMENTS CLARIFIED	CO	DVT	GS

STRUCTURE

TITLE

HORIZONTAL TERMINATION

DISTRIBUTION CONSTRN. STANDARD

westernpower

DRAWN: JRR	DATE: 18-03-2014	DRG. No.	
ORIGINATED:	SCALE: NTS	H04-1	
CHECKED: REE			
APPROVED: GRANT STACY		REV. J	SHT. 1/1

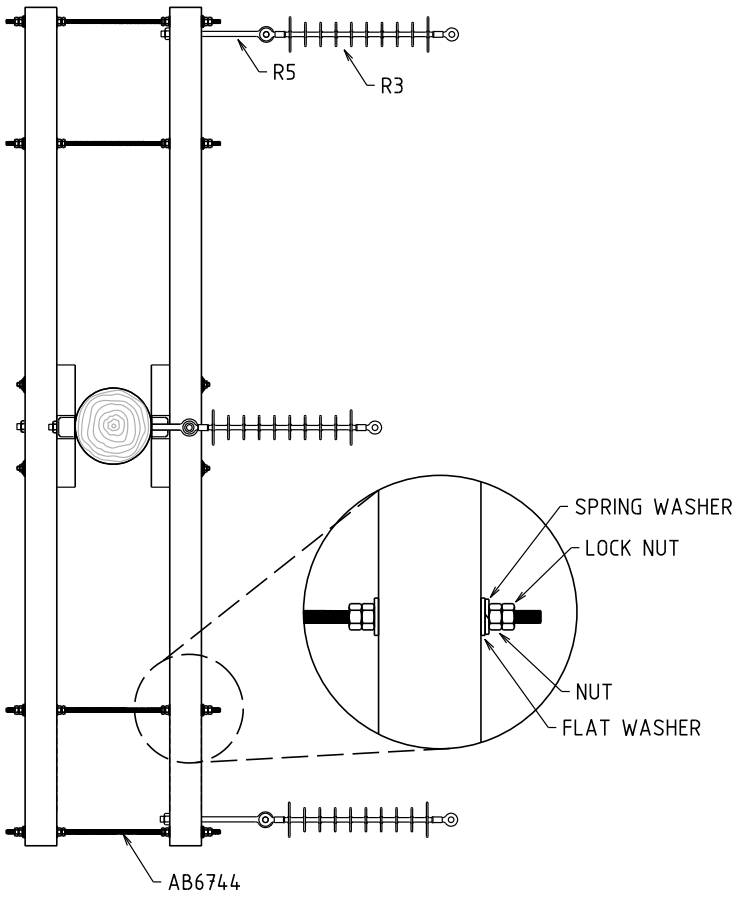

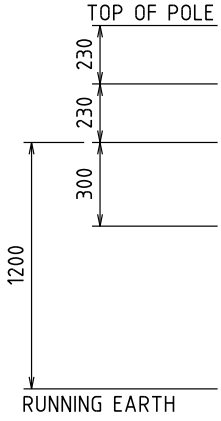

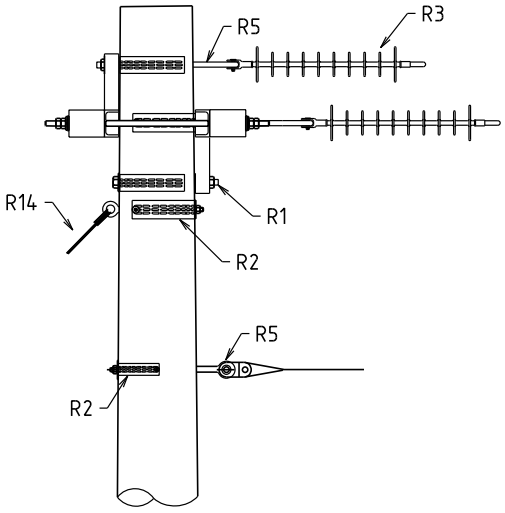

NOTES:
1. ALL DIMENSIONS ARE IN MILLIMETRES.
2. ALL HOLES 18ø U.N.O.
3. MAXIMUM DISTANCE BETWEEN DOWNEARTHS = 600m
4. THE CROSSARMS CAN BE AT DIFFERENT ANGLES, PROVIDED STAY CONFIGURATIONS ARE SATISFACTORY.

REV.	DATE	DESCRIPTION	ORGD.	CHKD.	APRD.
D	06.11.25	RE ATTACHMENT LOCATION UPDATED	KT	VAS	CO
C	21.05.25	ADDED STOCK CODES AB6744	VAS	NMc	CO
B	01.06.18	MORE DETAILS ADDED & DIMENSIONS FIXED	NMc	CO	GS
A	09.03.17	ORIGINAL ISSUE	CO	DVT	GS

STRUCTURE

TITLE

HORIZONTAL TERMINATION
ANTI SWAN CROSS-ARM

DISTRIBUTION CONSTRN. STANDARD

westernpower

DRAWN: JRR | DATE: 03-03-2017 | DRG. No. H04-2

ORIGINATED: CO | SCALE: NTS

CHECKED: DVT

APPROVED: GRANT STACY | REV. D | SHT. 1/1

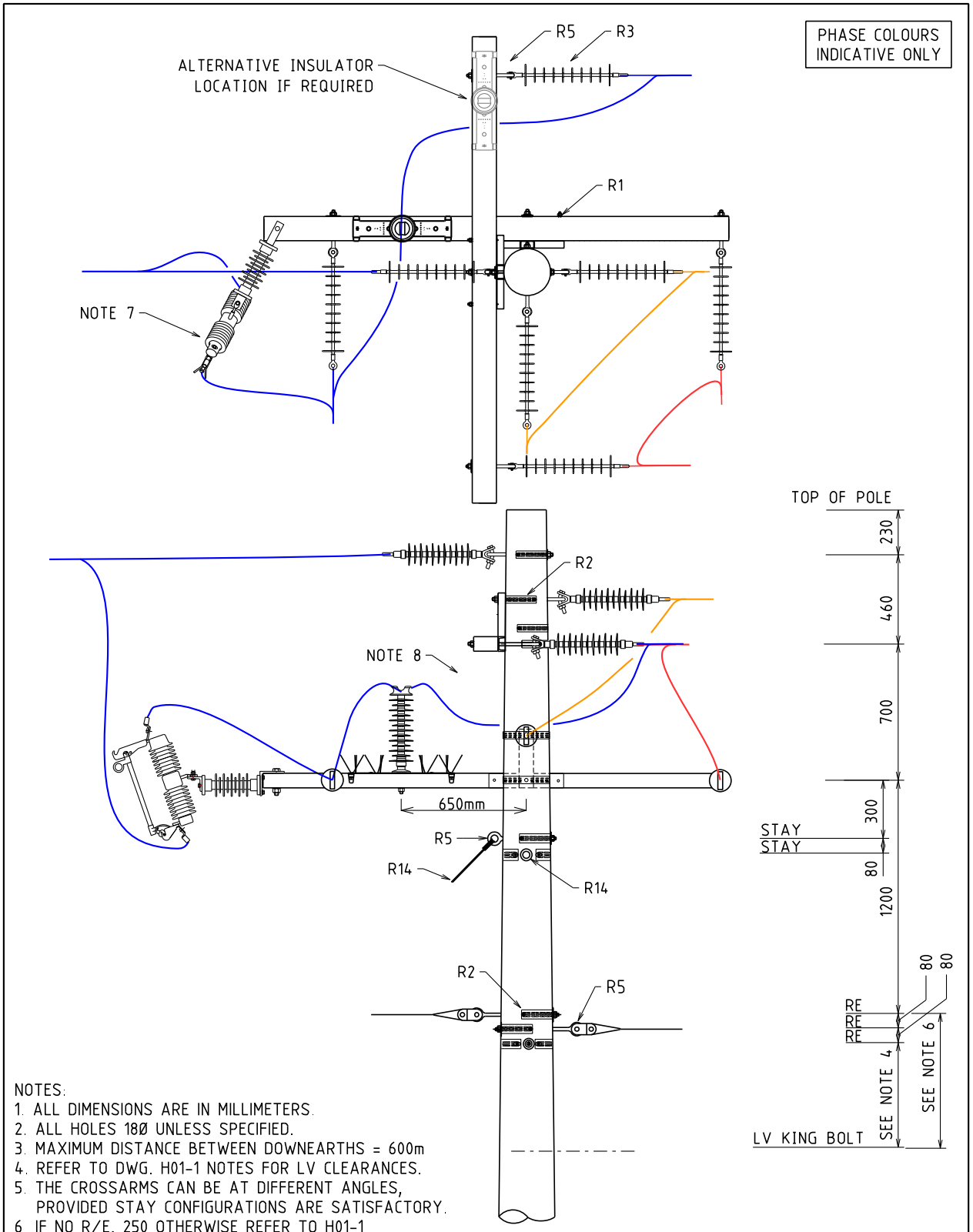

NOTES:
1. ALL DIMENSIONS ARE IN MILLIMETERS.
2. ALL HOLES 18Ø UNLESS SPECIFIED.
3. MAXIMUM DISTANCE BETWEEN DOWNEARTHS = 600m
4. REFER TO DWG. H01-1 NOTES FOR LV CLEARANCES.
5. THE CROSSARMS CAN BE AT DIFFERENT ANGLES, PROVIDED STAY CONFIGURATIONS ARE SATISFACTORY.
6. IF NO R/E, 250 OTHERWISE REFER TO H01-1.
7. DOF ANGLED AWAY FROM THE LONG ROD INSULATOR AS SHOWN.
8. MAINTAIN MIN 400MM CLEARANCE OF TAPS FROM POLE & CROSSARMS.

REV.	DATE	DESCRIPTION	ORGD.	CHKD.	APRD.
C	21.11.25	INSULATOR AND DOF RELOCATED. NOTES 7 & 8 ADDED	VAS	NMc	CO
B	26.03.21	DISTANCE BETWEEN CROSS-ARMS INCREASED TO 700	NN	KT	GS
A	24.09.19	ORIGINAL ISSUE	NN	REE	GS

STRUCTURE

TITLE

DOUBLE TERMINATION AND
1 PH T-OFF WITH DOF

DISTRIBUTION CONSTRN. STANDARD

westernpower

DRAWN: JRR DATE: 19-09-2019

ORIGINATED: NN SCALE: NTS

CHECKED: REE

APPROVED: GRANT STACY

DRG. No. H04-3

REV. C SHT. 1/1

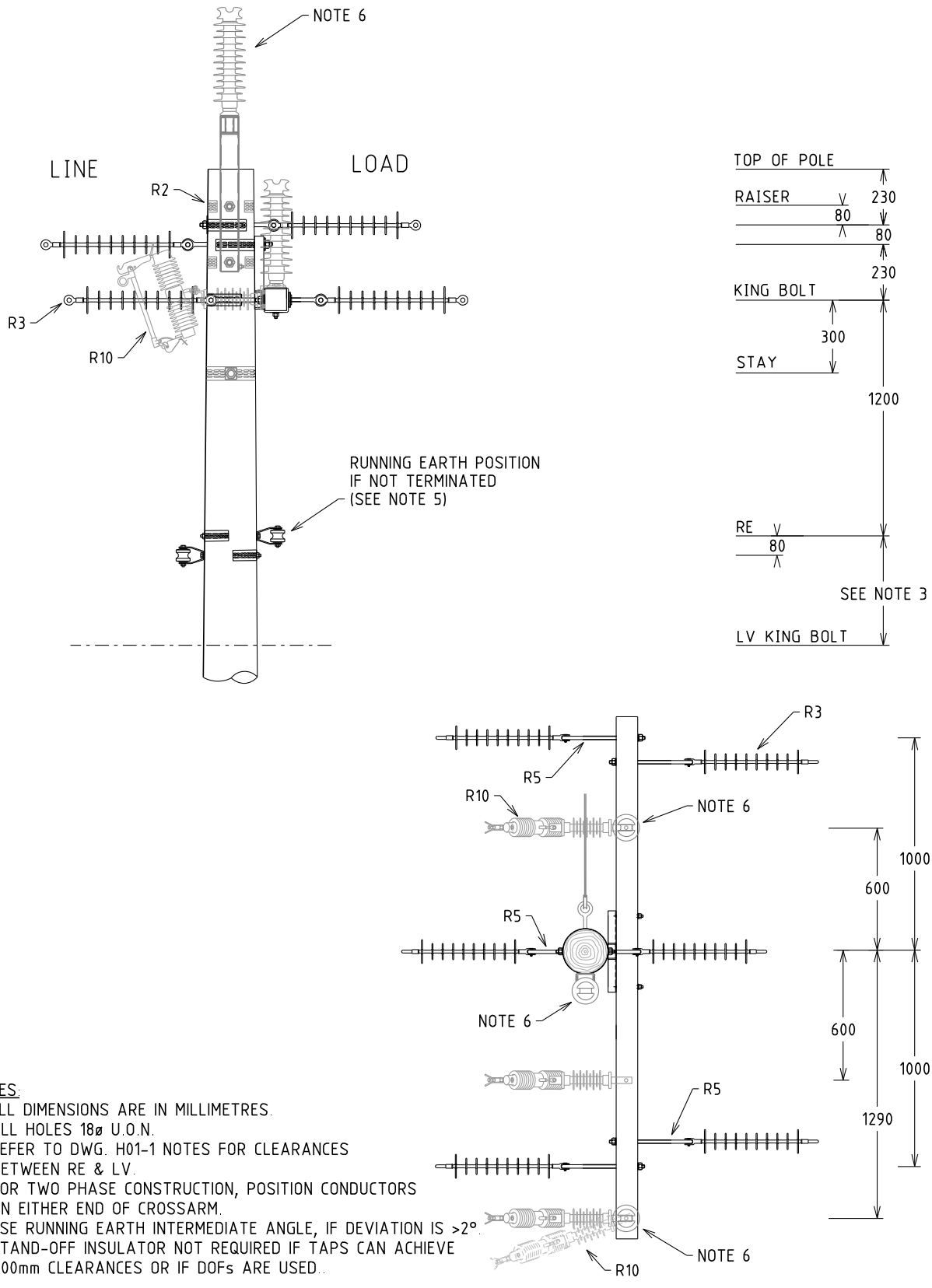

NOTES:
1. ALL DIMENSIONS ARE IN MILLIMETRES.
2. ALL HOLES 18ø U.O.N.
3. REFER TO DWG. H01-1 NOTES FOR CLEARANCES BETWEEN RE & LV.
4. FOR TWO PHASE CONSTRUCTION, POSITION CONDUCTORS ON EITHER END OF CROSSARM.
5. USE RUNNING EARTH INTERMEDIATE ANGLE, IF DEVIATION IS >2°.
6. STAND-OFF INSULATOR NOT REQUIRED IF TAPS CAN ACHIEVE 400mm CLEARANCES OR IF DOFs ARE USED.

REV.	DATE	DESCRIPTION	ORGD.	CHKD.	APRD.
G	09.07.25	CROSS-ARM ORIENTATION CHANGED	VAS	NMc	CO
F	14.08.18	CROSS-ARM ORIENTATION CHANGED	CO	NMc	GS
E	02.02.17	DRAWING NUMBER CHANGED	DVT	CO	GS
D	15.01.16	NOTE 5 AND POST INSULATOR ADDED	FK	ME	GS
C	24.09.14	NOTE 3 REVISED AND NOTE 4 ADDED			GS

STRUCTURE

TITLE

STRAIN ANGLE
WITH OR WITHOUT DROPOUT FUSE

DISTRIBUTION CONSTRN. STANDARD

westernpower

DRAWN: JRR | DATE: 18-03-2014 | DRG. No. H05-1

ORIGINATED: | SCALE: NTS

CHECKED: REE

APPROVED: GRANT STACY

REV. G | SHT. 1/1

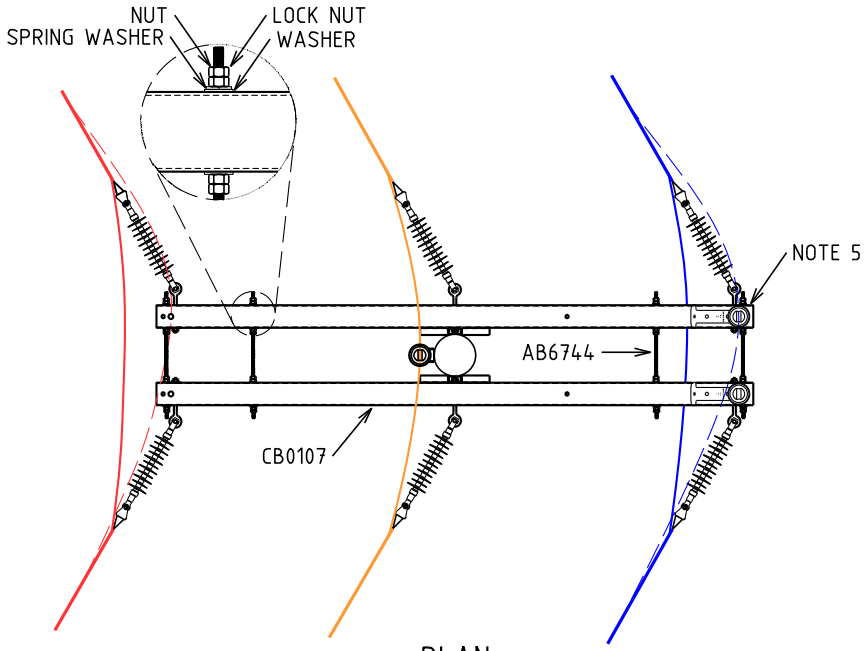

PLAN

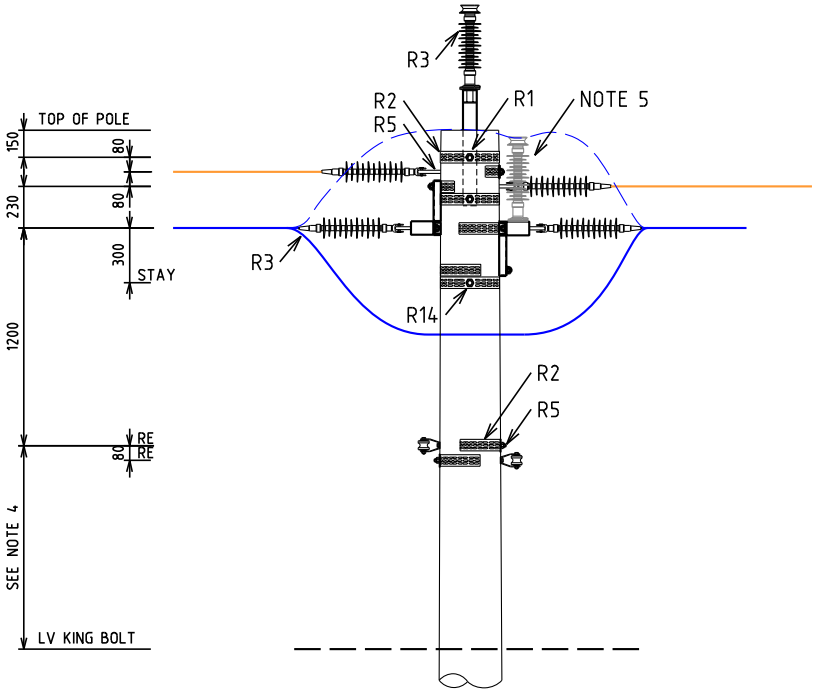

ELEVATION

NOTES:
1. ALL DIMENSIONS ARE IN MILLIMETRES.
2. ALL HOLES 18Ø U.O.N.
3. FOR TWO PHASE CONSTRUCTION, POSITION CONDUCTORS ON EITHER END OF CROSSARM.
4. REFER TO H01-1 NOTES FOR CLEARANCES BETWEEN RE & LV.
5. POST INSULATOR NOT REQUIRED IF TAPS UNDER CROSS ARM (PREFERRED).
   ALTERNATIVE LOCATION IF 400mm CLEARANCE CANNOT BE ACHIEVED TO POLE, CROSS ARM & STAY WIRE.
6. PHASE COLOURS INDICATIVE ONLY.

REV.	DATE	DESCRIPTION	DRGD.	CHKD.	APPRD
E	10.11.25	RE ATTACHMENT LOCATION UPDATED	KT	VAS	CO
D	03.06.25	RAISER BRACKET ADDED AND RE LOCATION CHANGED.	VAS	NMc	CO
C	02.05.17	STAND-OFF INSULATOR LOCATION CHANGED.	JC	REE	GS
B	03.03.17	DRAWING NUMBER CHANGED	DVT	REE	GS
A	07.10.16	ORIGINAL ISSUE	DVT	GS	GS

STRUCTURE

TITLE
STRAIN ANGLE UPTO 30° DEVIATION
DOUBLE ANTI-SWAN CROSS-ARM

DISTRIBUTION CONSTRN. STANDARD

westernpower

DRAWN: JRR	06-10-2016	DRG. No.	
ORIGINATED: DVT	SCALE: NTS	H05-2	
CHECKED: GS			
APPROVED: GRANT STACY		REV. E	SHT. 1/1

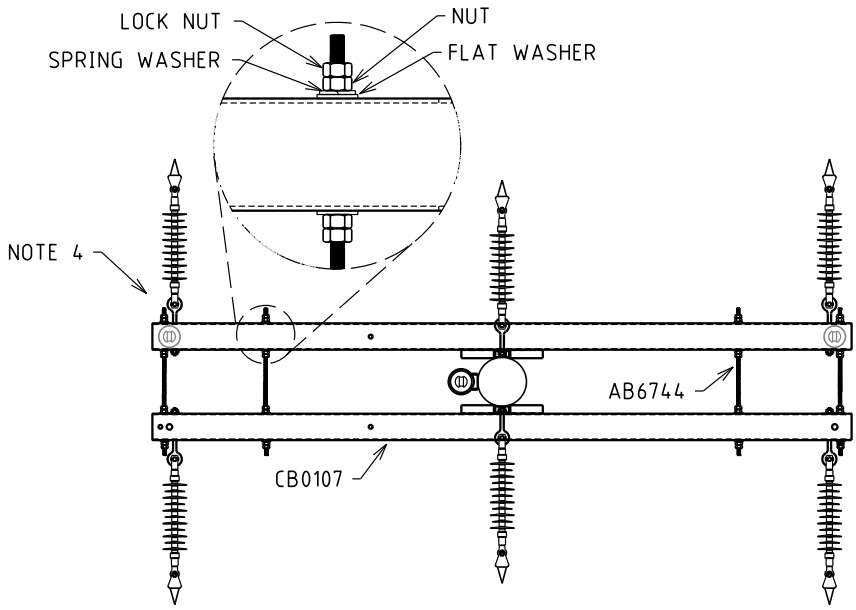

PLAN

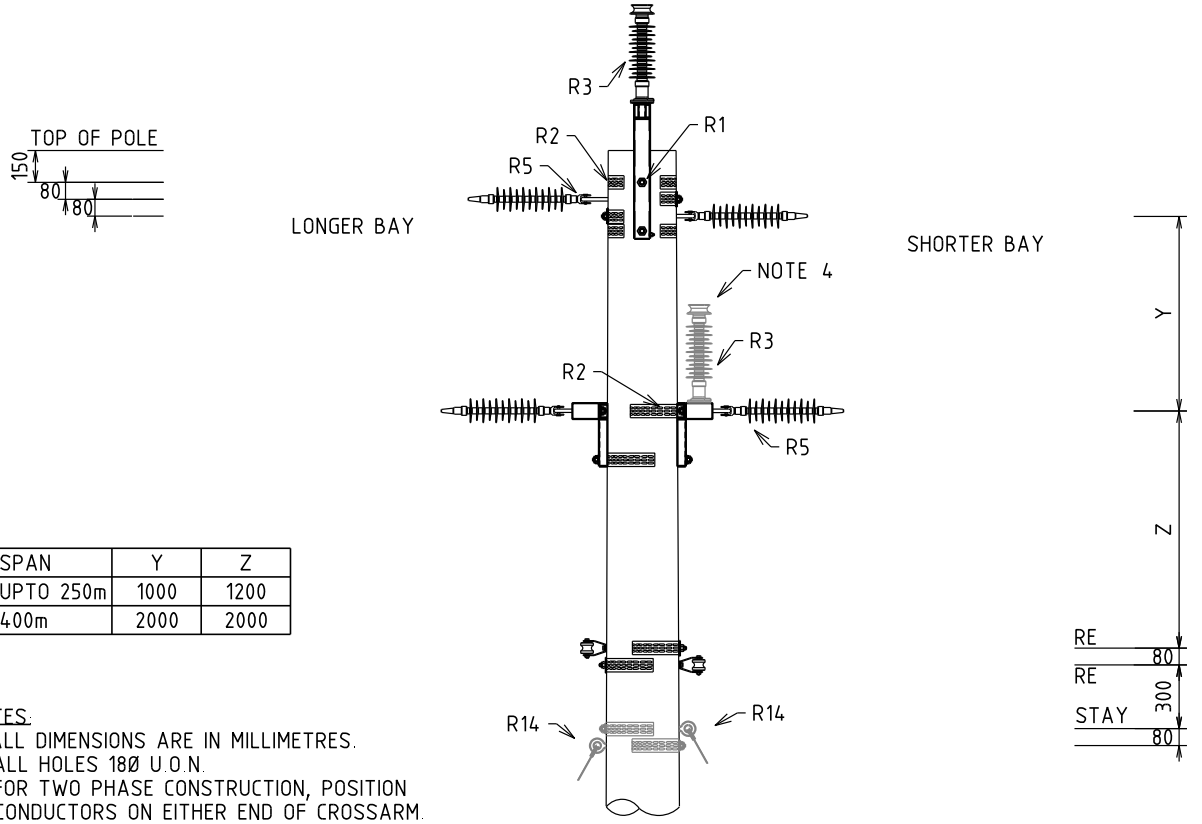

SPAN	Y	Z
UPTO 250m	1000	1200
400m	2000	2000

NOTES:
1. ALL DIMENSIONS ARE IN MILLIMETRES.
2. ALL HOLES 18Ø U.O.N.
3. FOR TWO PHASE CONSTRUCTION, POSITION CONDUCTORS ON EITHER END OF CROSSARM.
4. STAND-OFF INSULATOR NOT REQUIRED IF TAPS CAN ACHIEVE 400mm CLEARANCE TO STRUCTURE.

ELEVATION

REV.	DATE	DESCRIPTION	ORGD.	CHKD.	APRD.
C	03.06.25	RAISER BRACKET AND DETAIL ON AB6744 ADDED.	VAS	NMc	CO
B	03.03.17	DRAWING NUMBER CHANGED	JC	REE	GS
A	03.03.17	ORIGINAL ISSUE	DVT	CO	GS

STRUCTURE

TITLE
STRAIN ANGLE DOUBLE
ANTI-SWAN CROSS-ARM - LONG BAY

DISTRIBUTION CONSTRN. STANDARD

westernpower

DRAWN: JRR 20-01-2017
ORIGINATED: DVT SCALE: NTS
CHECKED: CO
APPROVED: GRANT STACY

DRG. No. H05-3
REV. C
SHT. 1/1

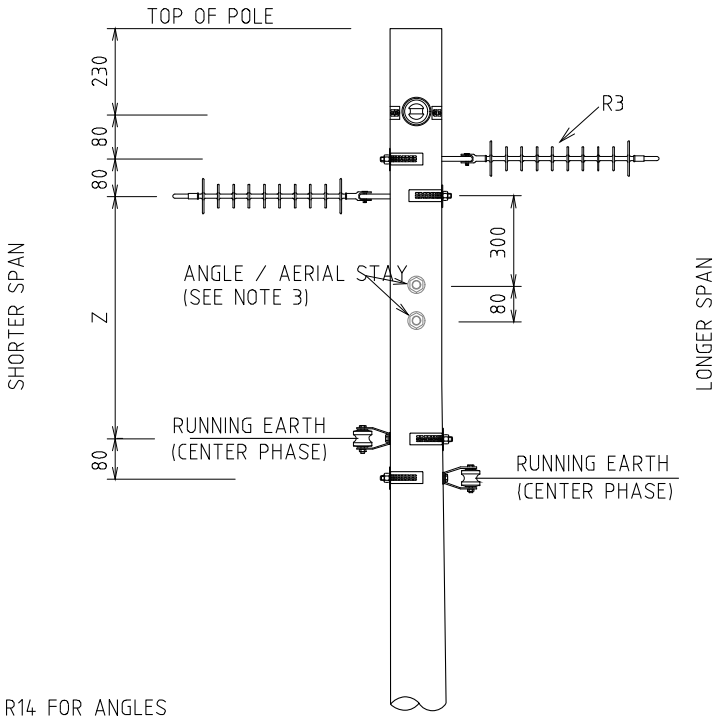

ELEVATION

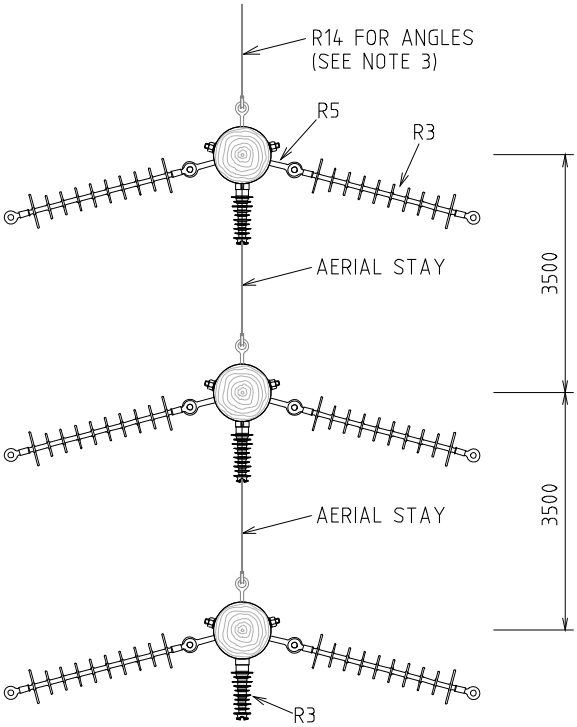

PLAN

SPAN	Z
UPTO 250m	1200
400m	2000

NOTES :-
1. ALL DIMENSIONS ARE IN MILLIMETRES.
2. ALL HOLES 18Ø U.O.N.
3. WITH ANGLE STRUCTURES EXCEEDING 2°
   A BISECTOR STAY IS REQUIRED.

REV	DATE	DESCRIPTION	ORGD.	CHKD.	APRD.
A	03.03.17	ORIGINAL ISSUE	DVT	CO	GS

STRUCTURE

TITLE
3Φ x 3 POLE LONG BAY SOLUTION
FOR ANGLE DEVIATION UPTO 45°

DISTRIBUTION CONSTRN. STANDARD

westernpower

DRAWN: JRR | DATE: 20-01-2017 | DRG. No. H05-4
ORIGINATED: DVT | SCALE: NTS
CHECKED: CO
APPROVED: GRANT STACY | REV. A | SHT.

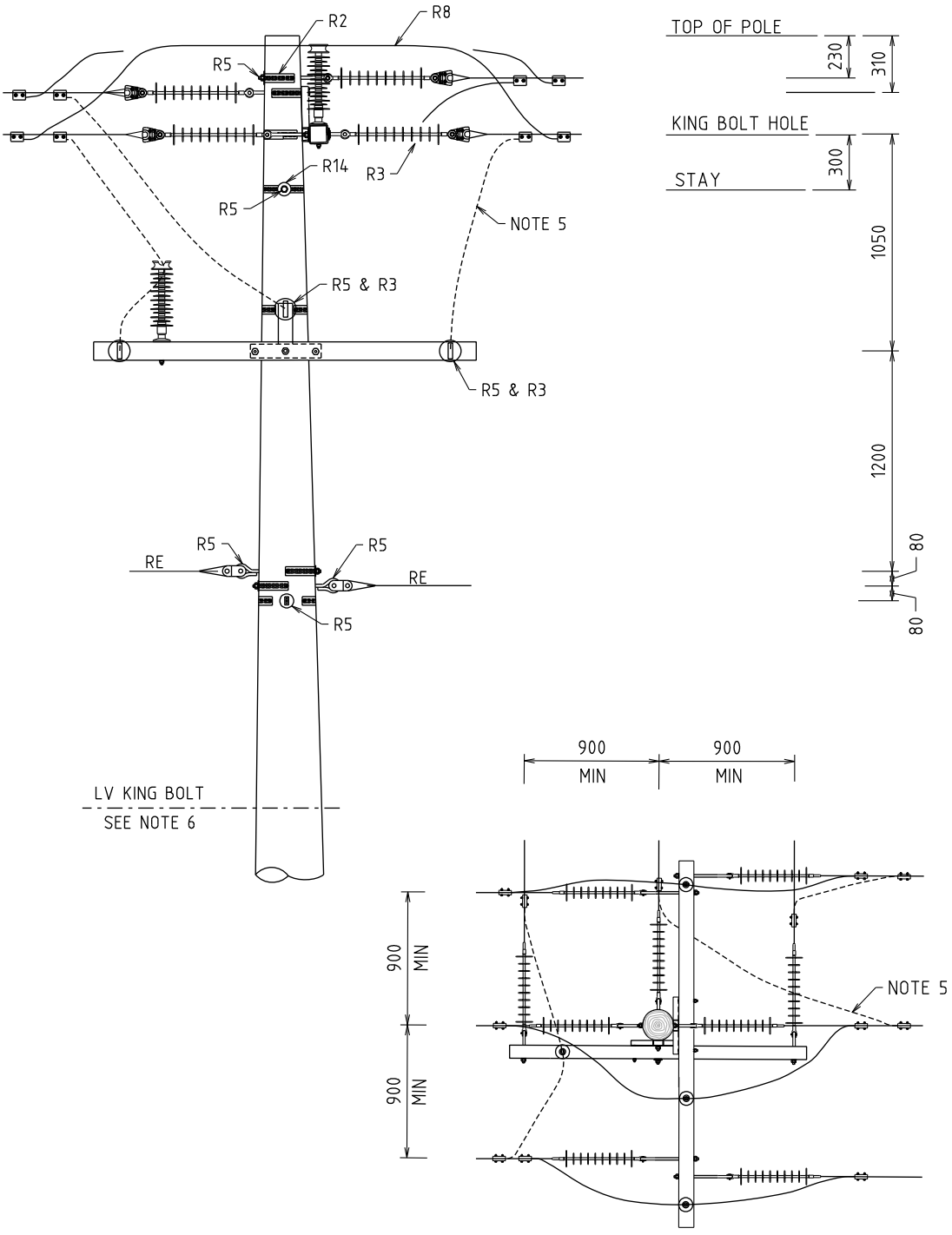

NOTES:
1. ALL DIMENSIONS ARE IN MILLIMETRES.
2. ALL HOLES 18Ø U.O.N.
3. MAXIMUM DISTANCE BETWEEN DOWNEARTH = 600m.
4. TAP NEED TO MAINTAIN 400 MIN. CLEARANCES.
5. TAPPINGS SHOWN ARE INDICATIVE ONLY. (NETWORK DEPENDENT).
6. REFER TO DWG. H01-1 NOTES FOR LV CLEARANCES.

REV.	DATE	DESCRIPTION	ORGD.	CHKD.	APRD.
A	24.10.24	ORIGINAL ISSUE	AS	NMc	CO

STRUCTURE

TITLE: 3PH IN-LINE STRAIN WITH TEE OFF

DISTRIBUTION CONSTRN. STANDARD

westernpower

DRAWN: JRR | DATE: 06-08-2024 | DRG. No. H05-5

ORIGINATED: AS | SCALE: NTS

CHECKED: NMc

APPROVED: CHRIS OMODEI | REV. A | SHT.

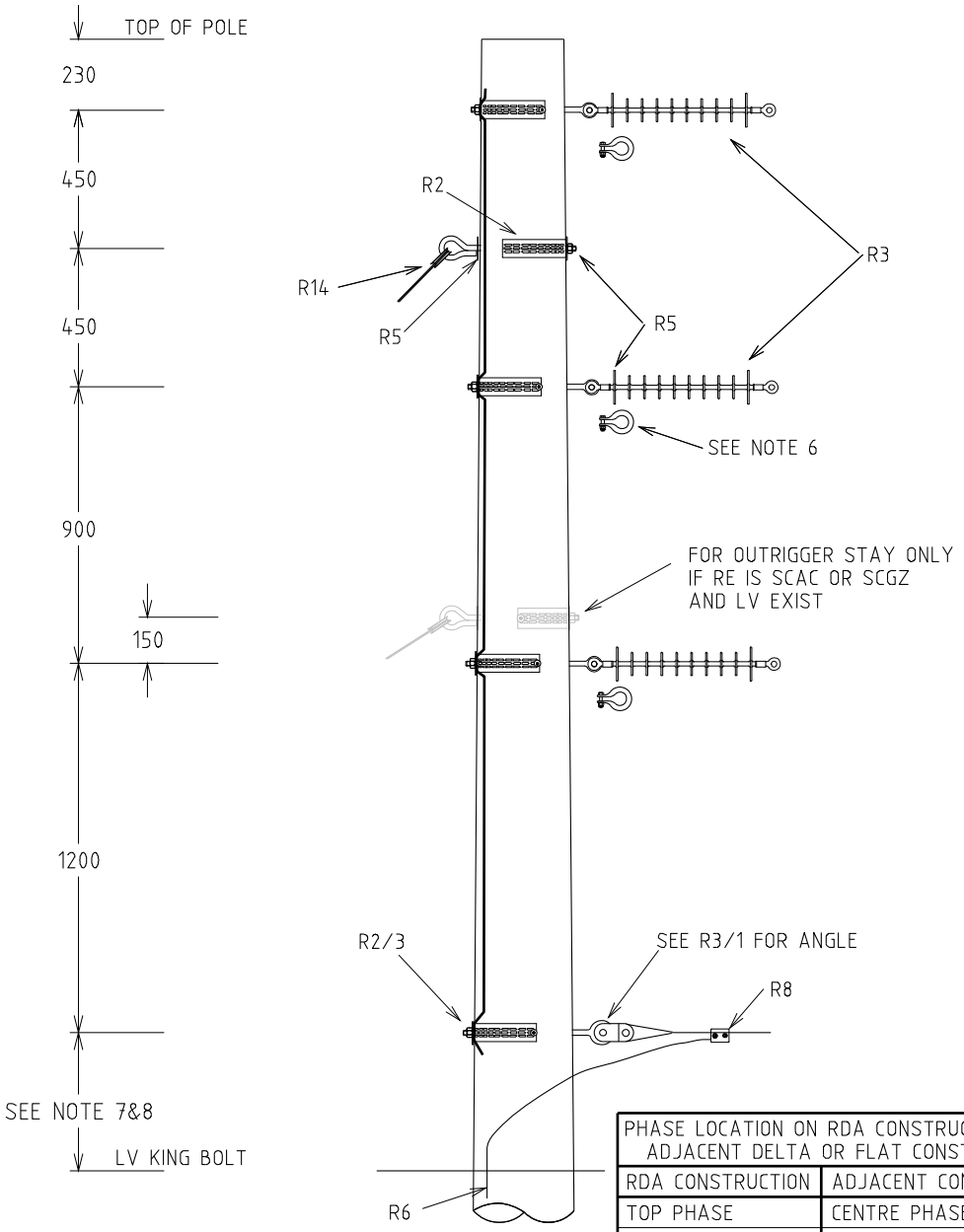

PHASE LOCATION ON RDA CONSTRUCTION FROM ADJACENT DELTA OR FLAT CONSTRUCTION	
RDA CONSTRUCTION	ADJACENT CONSTRUCTION
TOP PHASE	CENTRE PHASE
MIDDLE PHASE	OUTER PHASE
BOTTOM PHASE	INNER PHASE

NOTES:
1. ALL DIMENSIONS ARE IN MILLIMETRES.
2. ALL HOLES 18DIA U.O.N.
3. FOR BAY LENGTHS LESS THAN 55M WITH R/E -12.5M POLE.
4. FOR BAY LENGTHS LESS THAN 80M WITHOUT R/E -12.5M POLE IF ALL OTHER GROUND CLEARANCES COMPLY.
5. FOR BAY LENGTHS GREATER THAN 80M ON A 12.5m POLE H7 CONDUCTOR SPACING APPLY AND ALL OTHER GROUND CLEARANCES COMPLY.
6. FOR RDA USE BOW SHACKLE - OS0055.
7. WHEN LV CONDUCTOR IS;
   (a) LV BARE CONDUCTOR -
   650 IF R/E IS SCAC OR SCGZ
   1100 IF R/E IS AAAC.
   (b) LV ABC
   450 FOR ALL TYPES OF R/E CONDUCTOR
8. IF THERE IS NO RUNNING EARTH INSTALL LV AT R/E POSITION.

REV	DATE	DESCRIPTION	ORGD.	CHKD.	APRD.
L	09.01.18	PHASE LOCATION TABLE ADDED	CO	NMc	GS
K	06.07.17	NOTES REVISED	NMc	JC	GS
J	20.04.16	OUTRIGGER STAY ADDED	AT	DVT	GS
H	03.11.15	EARTHING SYSTEM MODIFIED	GS	REE	GS

STRUCTURE

TITLE: RUNNING DISC ANGLE OR VERTICAL TERMINATION (900mm SPACING)

DISTRIBUTION CONSTRN. STANDARD

westernpower

DRAWN: JRR | DATE: 18-03-2014 | DRG. No. H06

ORIGINATED: | SCALE: NTS

CHECKED: REE

APPROVED: GRANT STACY | REV. L | SHT.

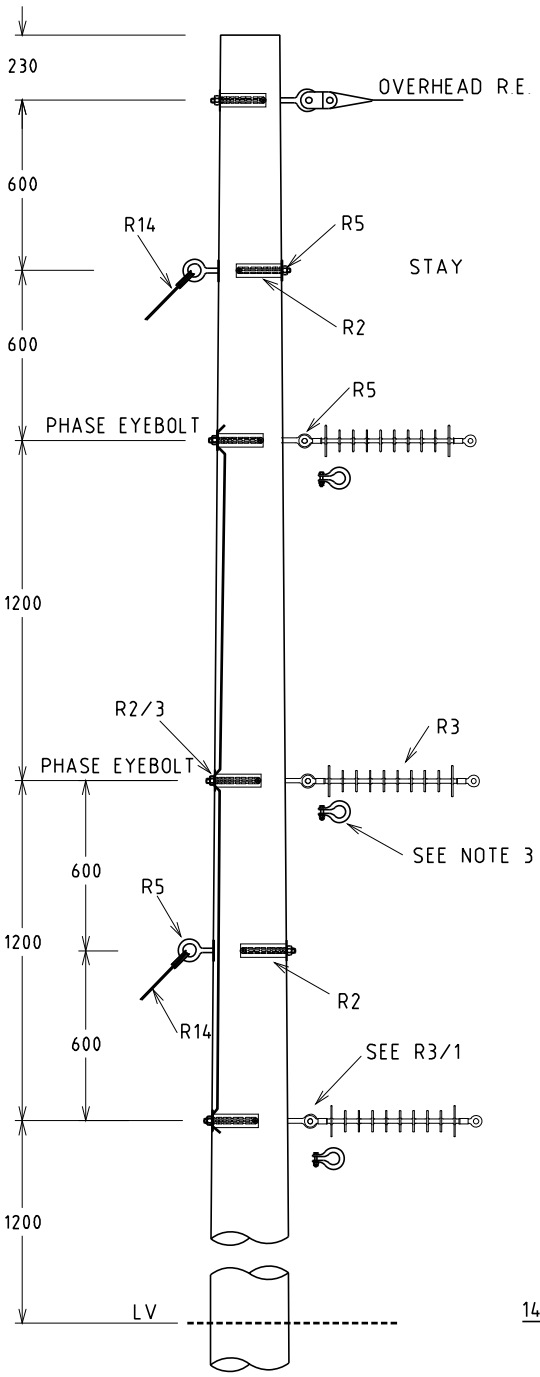

OVERHEAD EARTH WIRE

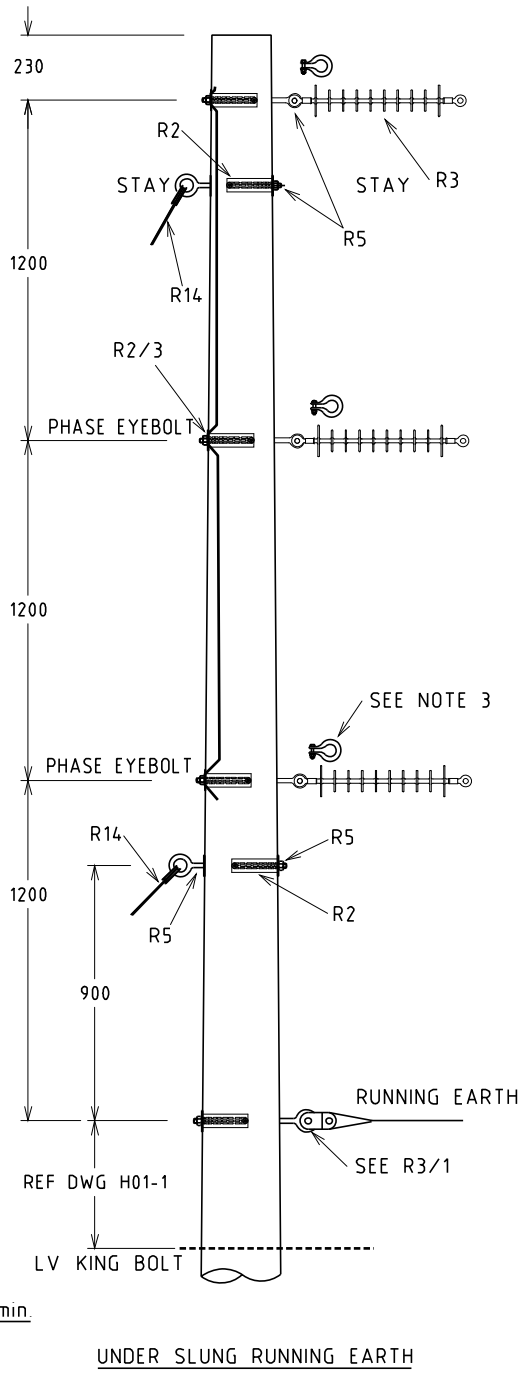

14m POLE min.

UNDER SLUNG RUNNING EARTH

PHASE LOCATION ON RDA CONSTRUCTION FROM ADJACENT DELTA OR FLAT CONSTRUCTION	
RDA CONSTRUCTION	ADJACENT CONSTRUCTION
TOP PHASE	CENTRE PHASE
MIDDLE PHASE	OUTER PHASE
BOTTOM PHASE	INNER PHASE

NOTES
1. ALL DIMENSIONS ARE IN MILLIMETRES.
2. ALL HOLES 18ϕ U.O.N.
3. FOR RDA USE BOW SHACKLE.

REV	DATE	DESCRIPTION	ORGD.	CHKD.	APRD
H	09.01.18	PHASE LOCATION TABLE ADDED	CO	NMc	GS
G	03.11.15	EARTHING SYSTEM MODIFIED	GS	REE	GS
F	29.01.15	SOME ANNOTATIONS REVISED	REE	REE	GS
E	15.09.14	NOTE 5 REVISED	JC	REE	GS

STRUCTURE

TITLE: RUNNING DISC ANGLE OR VERTICAL TERMINATION (1200mm SPACING)

DISTRIBUTION CONSTRN. STANDARD

westernpower

DRAWN: JRR | DATE: 18-03-2014 | DRG. No. H07

ORIGINATED: | SCALE: NTS

CHECKED: REE

APPROVED: GRANT STACY | REV. H | SHT.

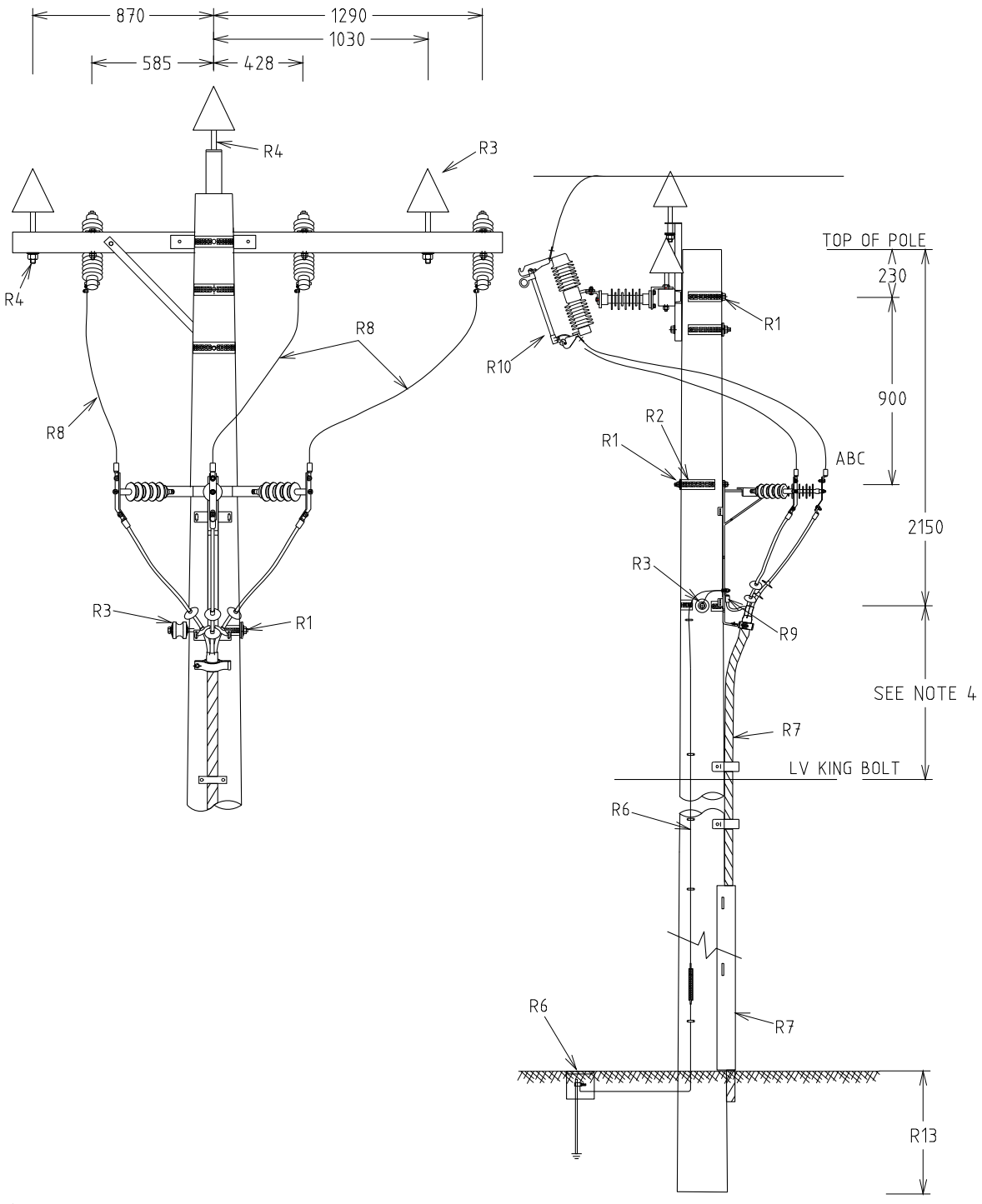

NOTES:
1. ALL DIMENSIONS ARE IN MILLIMETRES.
2. ALL HOLES 18Ø U.O.N.
3. MAXIMUM DISTANCE BETWEEN DOWNEARTH = 600m
4. (a) FOR OPEN AERIAL 650 IF R/E IS SCAC OR SCGZ
   1100 IF R/E IS AAAC
   (b) FOR LV ABC 450.

EARTH @ LESS THAN 30Ω

REV	DATE	DESCRIPTION	ORGD.	CHKD.	APRD
C	29.11.18	EARTHING SYSTEM AND NOTES REVISED	REE	NMc	GS
B	18.09.14	FORMAT CHANGED, DIMENSIONS AND NOTES REVISED			GS
A	28.10.10	ORIGINAL ISSUE			

STRUCTURE

TITLE

INTERMEDIATE CABLE
WITH DROPOUT FUSE

DISTRIBUTION CONSTRN. STANDARD

westernpower

DRAWN: JRR | DATE: 18-03-2014 | DRG. No. H08-1

ORIGINATED: | SCALE: NTS

CHECKED: REE

APPROVED: GRANT STACY | REV. C | SHT.

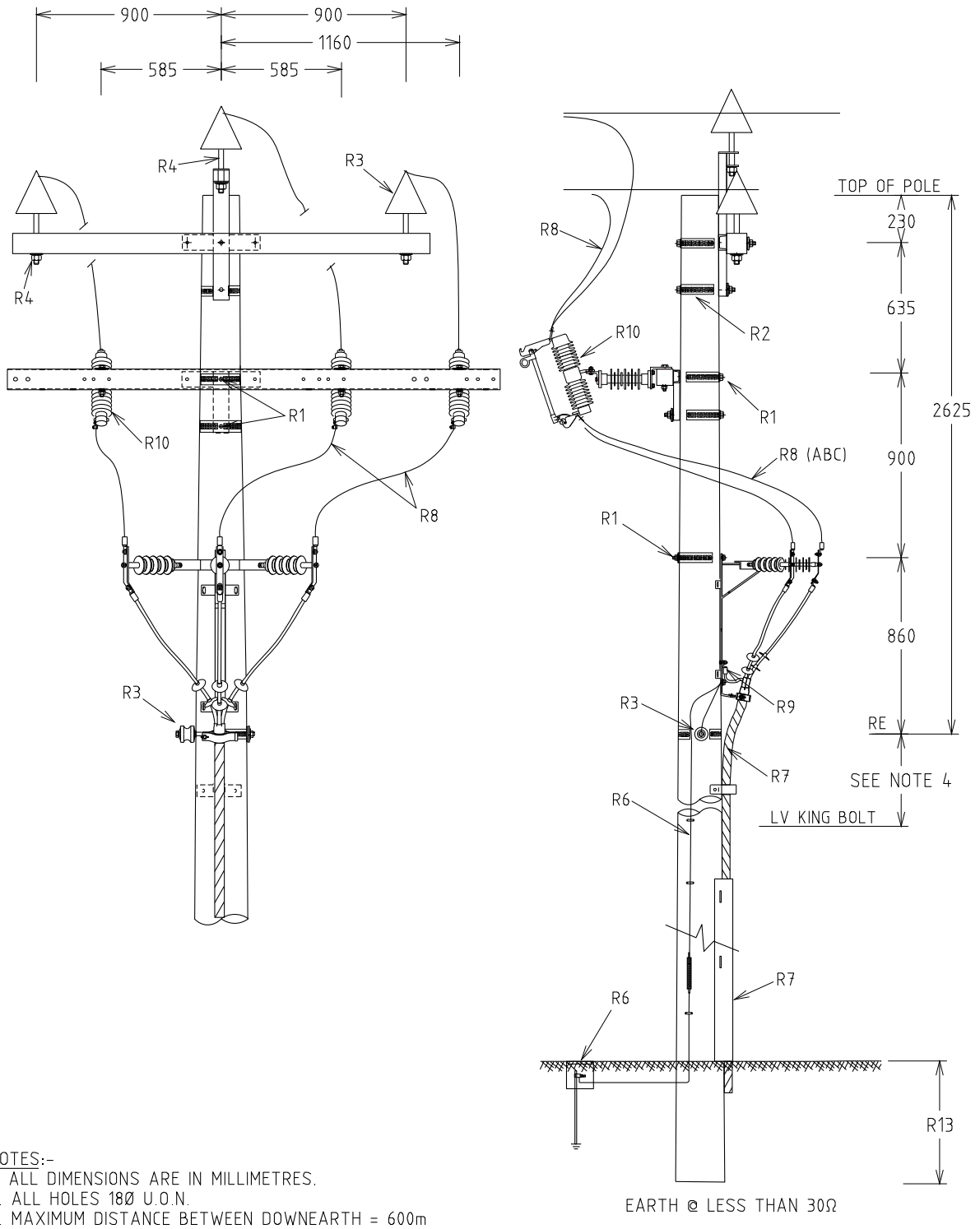

NOTES:-
1. ALL DIMENSIONS ARE IN MILLIMETRES.
2. ALL HOLES 18Ø U.O.N.
3. MAXIMUM DISTANCE BETWEEN DOWNEARTH = 600m
4. (a) FOR OPEN AERIAL 650 IF R/E IS SCAC OR SCGZ
   1100 IF R/E IS AAAC
   (b) FOR LV ABC 450.

12.5m 6kN POLE

REV	DATE	DESCRIPTION	ORGD.	CHKD.	APRD
D	29.11.18	EARTHING SYSTEM AND NOTES REVISED	REE	NMc	GS
C	15.09.14	NOTE 3 REVISED			GS
B	09.07.14	FORMAT CHANGED AND NOTES REVISED			GS

STRUCTURE

TITLE: INTERMEDIATE CABLE WITH DROPOUT FUSE (ALTERNATE CROSSARM)

DISTRIBUTION CONSTRN. STANDARD

westernpower

DRAWN: JRR | DATE: 18-03-2014 | DRG. No. H08-2

ORIGINATED: | SCALE: NTS

CHECKED: REE

APPROVED: GRANT STACY | REV. D | SHT.

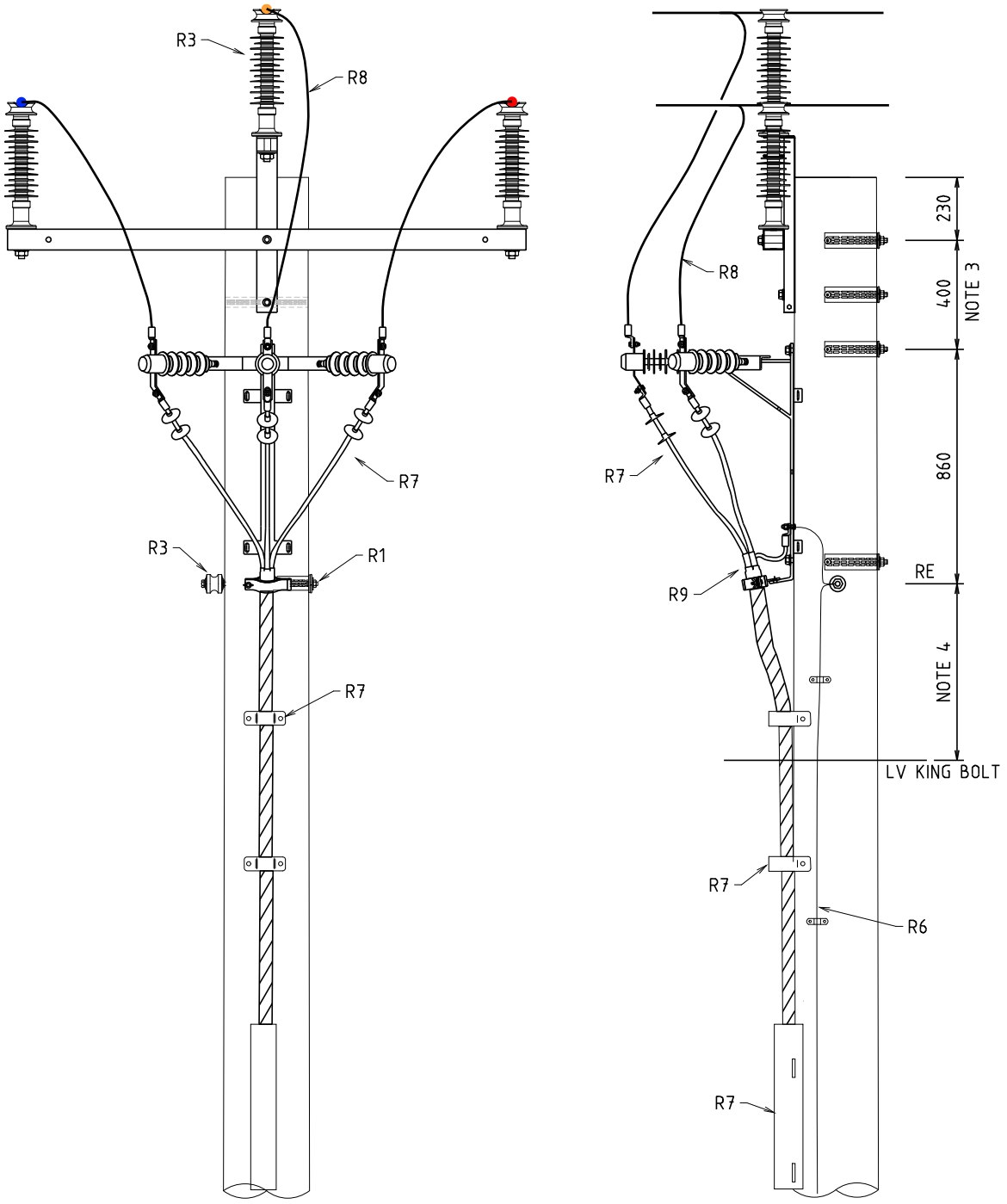

NOTES:-
1. ALL DIMENSIONS ARE IN MILLIMETRES.
2. ALL HOLES 18Φ U.O.N.
3. CAN BE INCREASED TO MAX. 1000 WHEN NO RUNNING EARTH PRESENT.
4. (a) FOR OPEN AERIAL 650 IF R/E IS SCAC OR SCGZ & 1100 IF R/E IS AAAC
   (b) FOR LV ABC 450.
5. MAXIMUM DISTANCE BETWEEN DOWNEARTH = 600m.

REV	DATE	DESCRIPTION	ORGD.	CHKD.	APRD
A	30.08.19	ORIGINAL ISSUE	MS	NMc	GS

STRUCTURE

TITLE

INTERMEDIATE CABLE
WITHOUT DROPOUT FUSE

DISTRIBUTION CONSTRN. STANDARD

westernpower

DRAWN: JRR | DATE: 29-08-2019 | DRG. No. H08-3

ORIGINATED: NMc | SCALE: NTS

CHECKED: REE

APPROVED: GRANT STACY | REV. A | SHT.

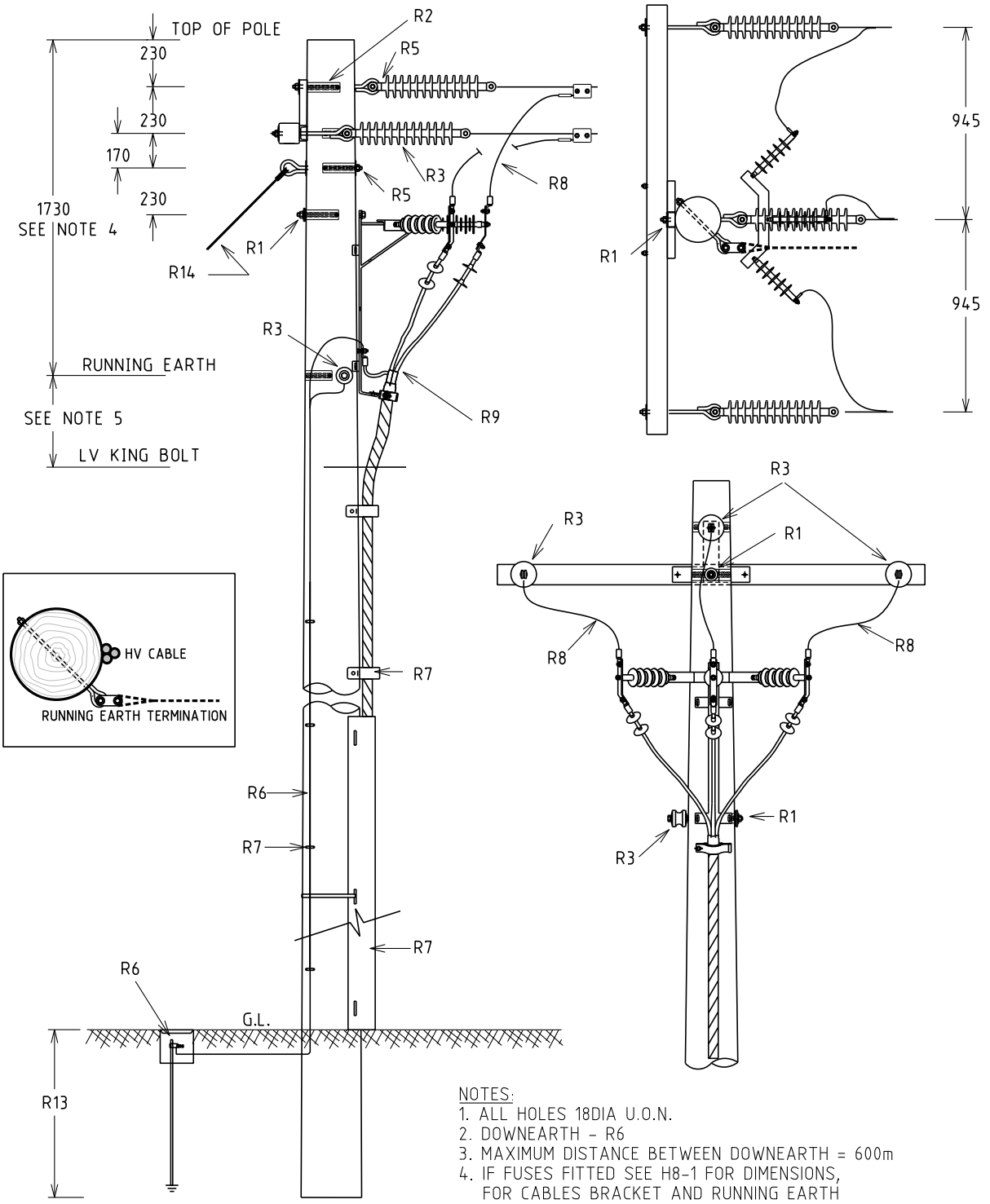

EARTH @ LESS THAN 30Ω

NOTES:
1. ALL HOLES 18DIA U.O.N.
2. DOWNEARTH - R6
3. MAXIMUM DISTANCE BETWEEN DOWNEARTH = 600m
4. IF FUSES FITTED SEE H8-1 FOR DIMENSIONS, FOR CABLES BRACKET AND RUNNING EARTH & LV LOWERED TO SUIT.
5. 650 IF R/E IS SCAC OR SCGZ
   1100 IF R/E IS AAAC.
   450 IF LV IS ABC

R. No.	DATE	DESCRIPTION	ORGD.	CHED.	APRD.
G	30.04.15	MORE DETAILS ADDED AND DIM 1730 WAS 1650	CO	AK	GS
F	15.09.14	NOTES REVISED			GS
E	09.07.14	FORMAT CHANGED AND NOTES REVISED			GS
D	30.09.10	ORIGINAL ISSUE			

STRUCTURE

TITLE
TERMINATION CABLE
WITH DROPOUT FUSES UPSTREAM

DISTRIBUTION CONSTRN. STANDARD

westernpower

DRAWN: JRR DATE: 18-03-2014
ORIGINATED: SCALE: NTS
CHECKED: REE
APPROVED: GRANT STACY

DRG. No. H09-1
REV. G
SHT.

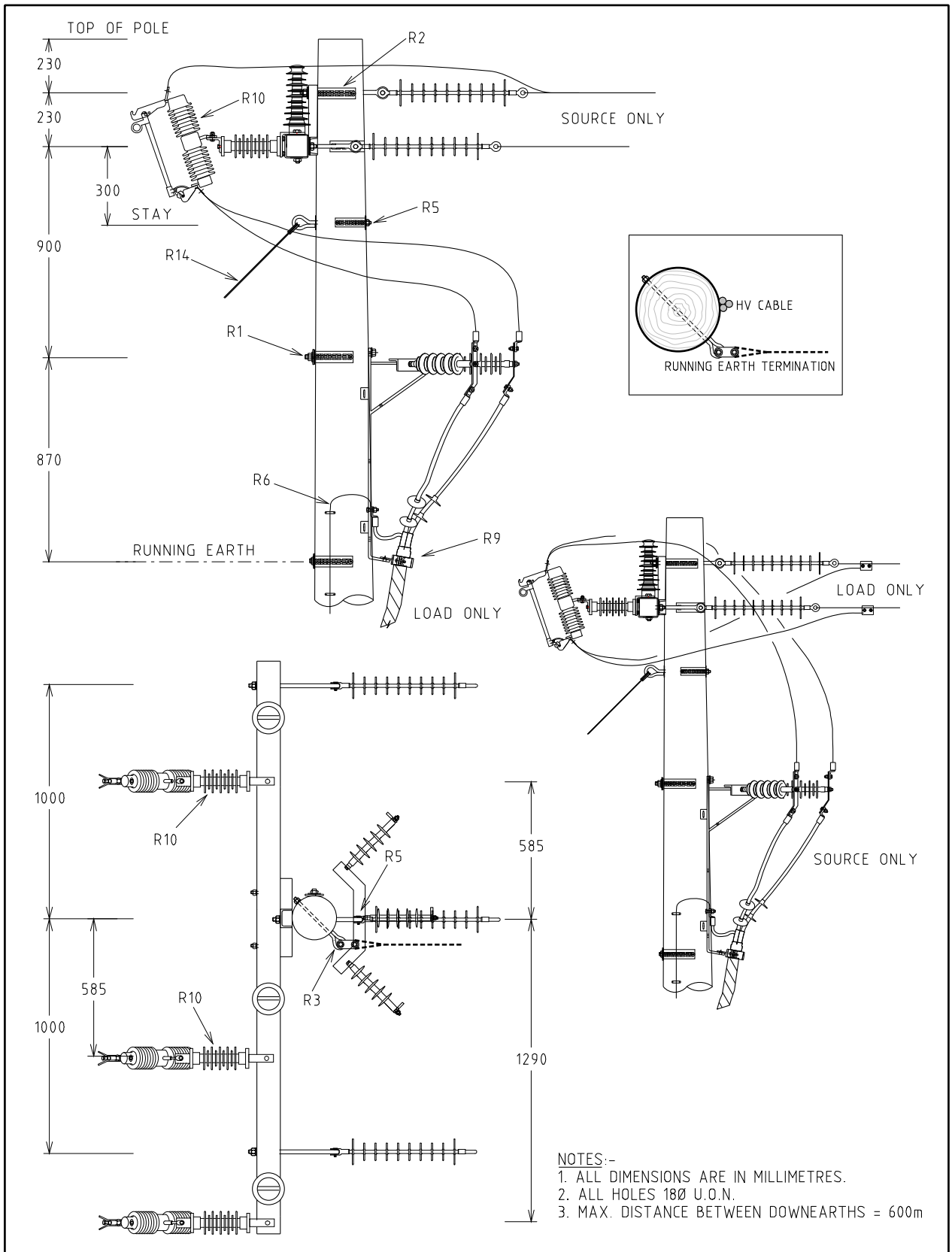

NOTES:-
1. ALL DIMENSIONS ARE IN MILLIMETRES.
2. ALL HOLES 18Ø U.O.N.
3. MAX. DISTANCE BETWEEN DOWNEARTHS = 600m

REV	DATE	DESCRIPTION	ORGD.	CHKD.	APRD
E	05.10.18	NOTES REVISED AND MORE DETAILS ADDED	REE	NN	GS
D	08.09.16	SOURCE AND LOAD INDICATED	FK	REE	ME
C	15.01.16	STAY ADDED	FK	ME	GS
B	19.11.13	ORIGINAL ISSUE			

STRUCTURE

TITLE

TERMINATION & CABLE
WITH DROPOUT FUSES

DISTRIBUTION CONSTRN. STANDARD

westernpower

DRAWN: JRR	DATE: 18-03-2014	DRG. No.	
ORIGINATED:	SCALE: NTS	H09-2	
CHECKED: REE			
APPROVED: GRANT STACY		REV. E	SHT.

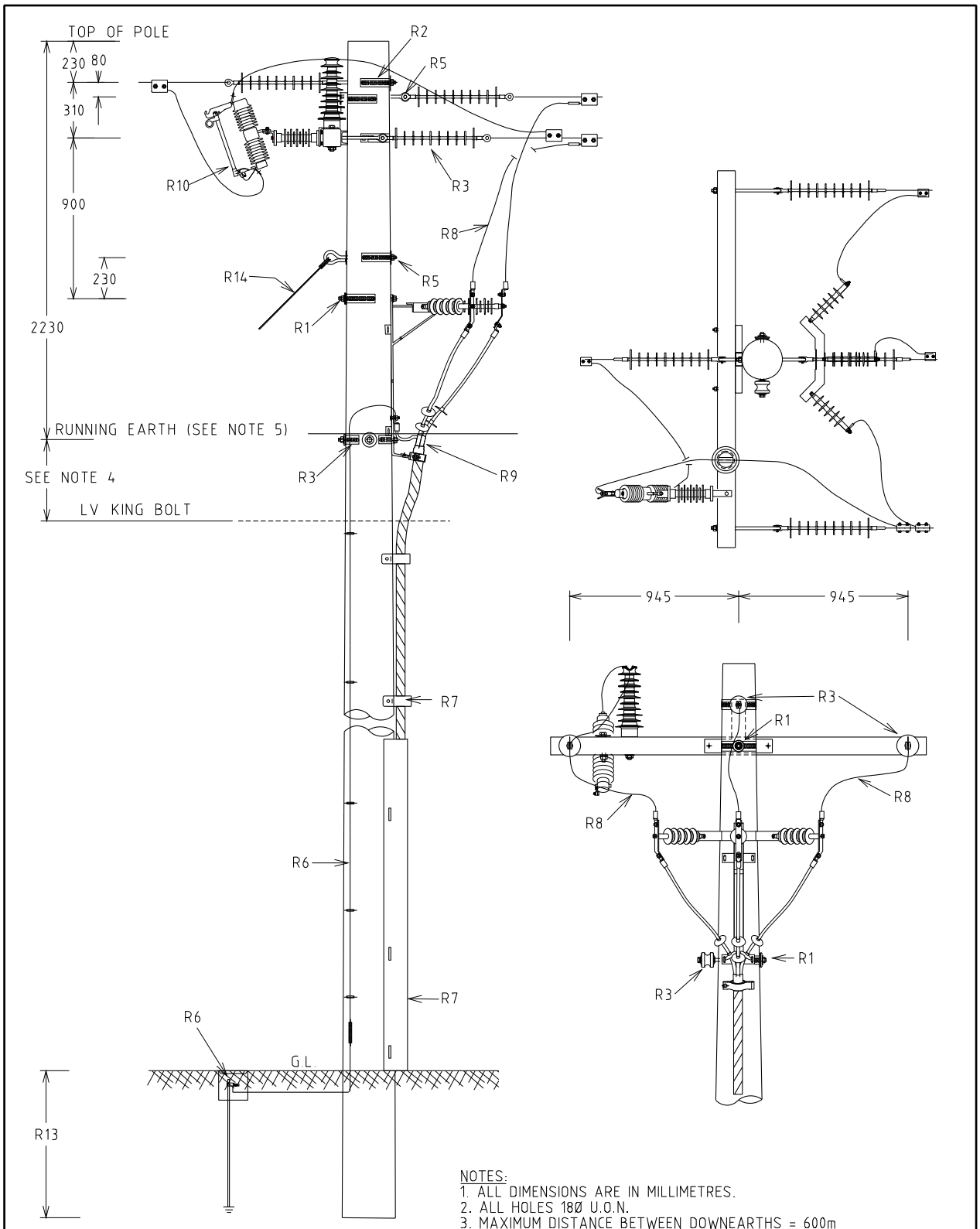

NOTES:
1. ALL DIMENSIONS ARE IN MILLIMETRES.
2. ALL HOLES 18Ø U.O.N.
3. MAXIMUM DISTANCE BETWEEN DOWNEARTHS = 600m
4. REFER TO DWG. H01-1 NOTES FOR CLEARANCES BETWEEN RE & LV.
5. USE RUNNING EARTH INTERMEDIATE ANGLE, IF DEVIATION IS >2°.

REV	DATE	DESCRIPTION	ORGD.	CHKD.	APRD.
C	15.09.14	NOTE 4 REVISED			GS
B	09.07.14	FORMAT CHANGED AND NOTES REVISED			GS
A	12.12.11	ORIGINAL ISSUE			

STRUCTURE

TITLE: 3 PHASE TERMINATION & CABLE WITH FUSED SINGLE PHASE TEE-OFF

DISTRIBUTION CONSTRN. STANDARD

westernpower

DRAWN: JRR	DATE: 18-03-2014	DRG. No.	
ORIGINATED:	SCALE: NTS	H09-3	
CHECKED: REE			
APPROVED: GRANT STACY		REV. C	SHT.

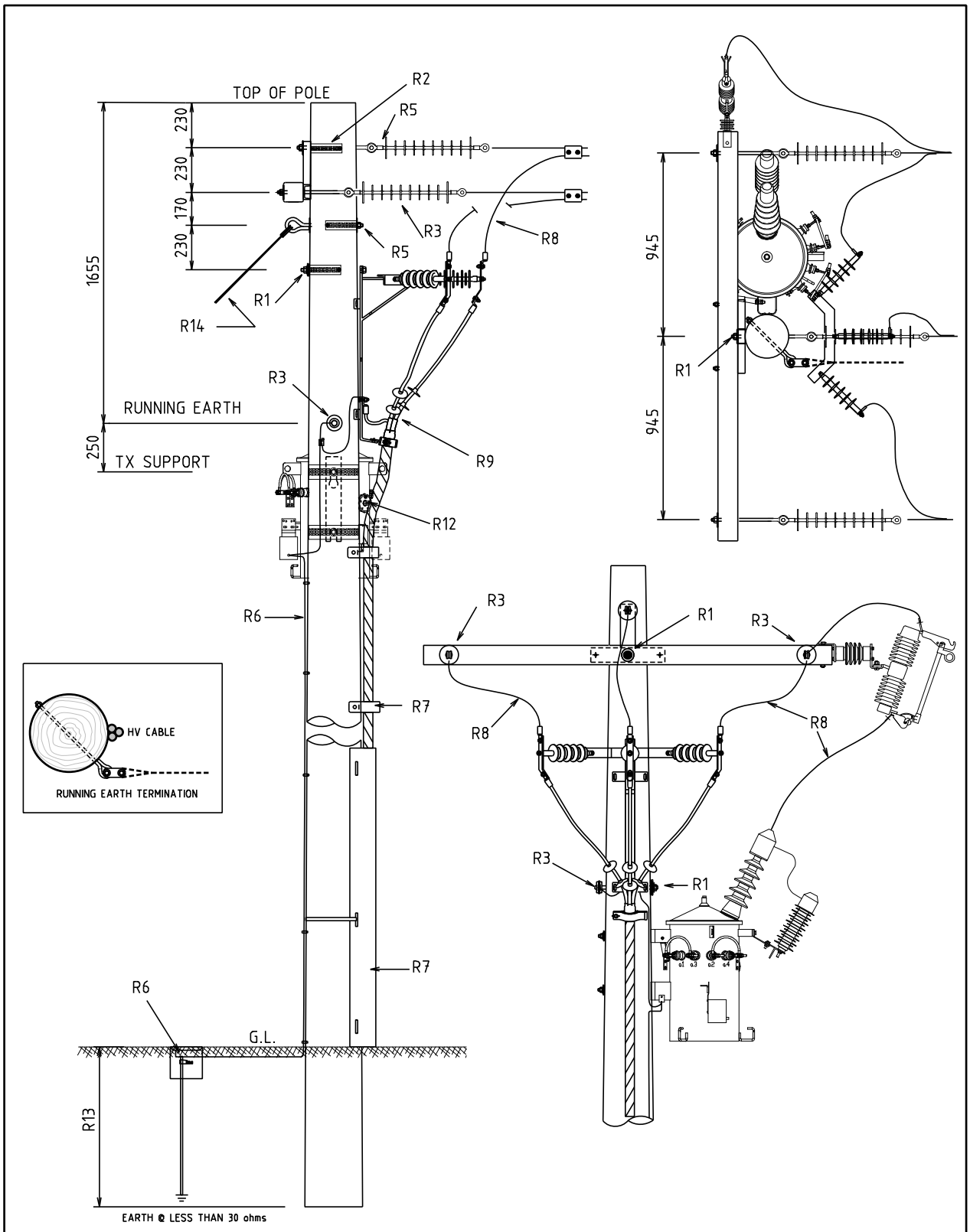

NOTES:-
1. ALL DIMENSIONS ARE IN MILLIMETRES.

REV	DATE	DESCRIPTION	ORGD.	CHKD.	APRD.
A	18.10.19	ORIGINAL ISSUE	NN	REE	GS

STRUCTURE

TITLE

TERMINATION CABLE
SINGLE PHASE TX AND DOF

DISTRIBUTION CONSTRN. STANDARD

westernpower

DRAWN: JRR	DATE: 01-10-2019	DRG. No. H09-4
ORIGINATED: NN	SCALE: NTS	
CHECKED: REE		
APPROVED: GRANT STACY		REV. A SHT.

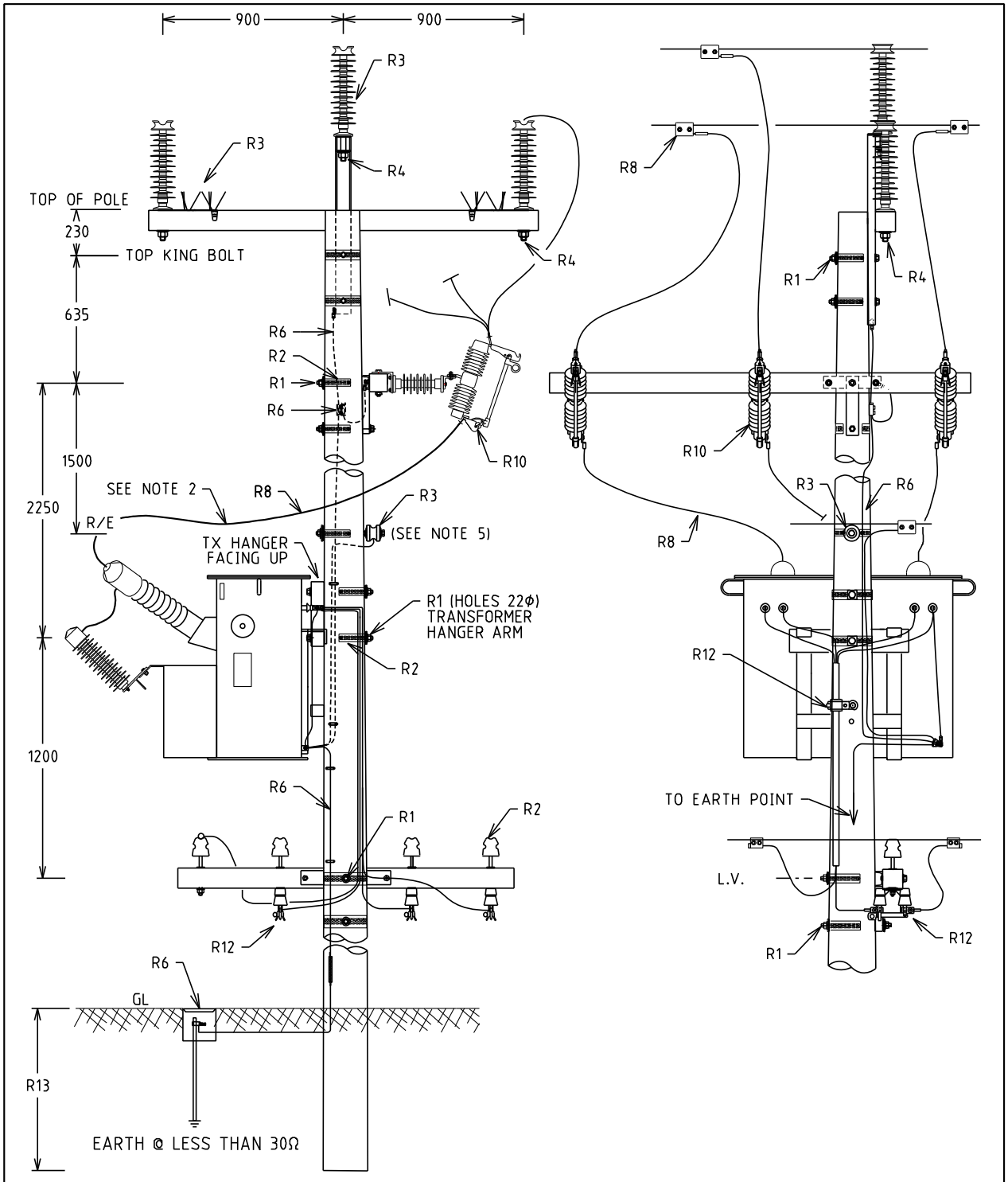

12.5m POLE min.

NOTES:
1. ALL DIMENSIONS ARE IN MILLIMETRES.
2. TRAIN INSULATED JUMPERS AWAY FROM R/E & TOP OF TX TANK.MINIMUM PH-E 380mm CLEARANCE
3. ALL HOLES 18Ø U.O.N.
4. MAXIMUM DISTANCE BETWEEN DOWNEARTH = 600m.
5. USE RUNNING EARTH INTERMEDIATE ANGLE, IF DEVIATION IS >2°.
6. FOR 2 BUSHING TRANSFORMER OMIT CENTRE PHASE.

REV.	DATE	DESCRIPTION	ORGD.	CHKD.	APRD.
L	08.12.25	EARTHING TO TOP & DOF CROSSARM ADDED	CO	KT	MM
K	16.11.18	EARTHING SYSTEM MODIFIED & TX MODEL CHANGED	NMc	NN	GS
J	17.05.16	NOTE 7 ADDED	REE	CO	GS

STRUCTURE

TITLE: INTERMEDIATE TRANSFORMER HV TO OPEN AERIAL

DISTRIBUTION CONSTRN. STANDARD

westernpower

DRAWN: JRR | DATE: 18-03-2014 | ORG. No. H10-1

ORIGINATED: | SCALE: NTS

CHECKED: REE

APPROVED: GRANT STACY | REV L | SHT. 1/1

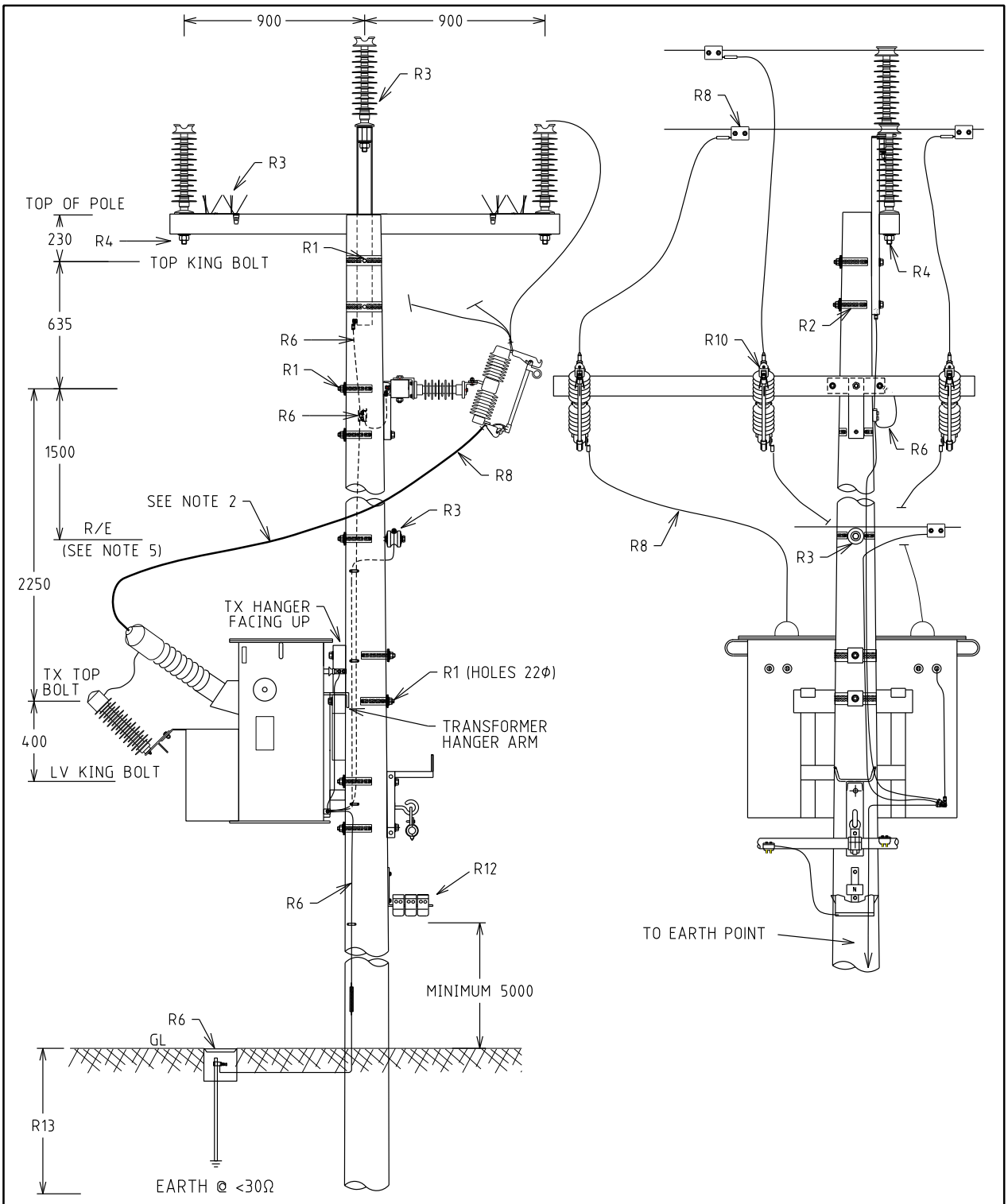

12.5m POLE min.

NOTES:
1. ALL DIMENSIONS ARE IN MILLIMETRES.
2. TRAIN INSULATED JUMPERS AWAY FROM R/E & TOP OF TX TANK.MINIMUM PH-E 380mm CLEARANCE
3. ALL HOLES 18Ø U.O.N.
4. MAXIMUM DISTANCE BETWEEN DOWNEARTH = 600m.
5. USE RUNNING EARTH INTERMEDIATE ANGLE, IF DEVIATION IS >2°.
6. FOR 2 BUSHING TRANSFORMER OMIT CENTRE PHASE.

REV.	DATE	DESCRIPTION	ORGD.	CHKD.	APRD.
N	10.12.25	EARTHING TO TOP & DOF CROSSARM ADDED	CO	KT	MM
M	18.10.19	LV KING BOLT LOCATION ADDED	CO	NMc	GS
L	16.11.18	EARTHING SYSTEM MODIFIED & TX MODEL CHANGED	NMc	NN	GS
K	17.05.16	NOTE 7 ADDED	REE	CO	GS
J	15.02.16	NOTE 5 ADDED	REE	JC	GS

STRUCTURE

TITLE: INTERMEDIATE TRANSFORMER HV TO ABC

DISTRIBUTION CONSTRN. STANDARD

westernpower

DRAWN: JRR | DATE: 18-03-2014 | DRG. No. H10-2

ORIGINATED: | SCALE: NTS

CHECKED: REE

APPROVED: GRANT STACY | REV. N | SHT. 1/1

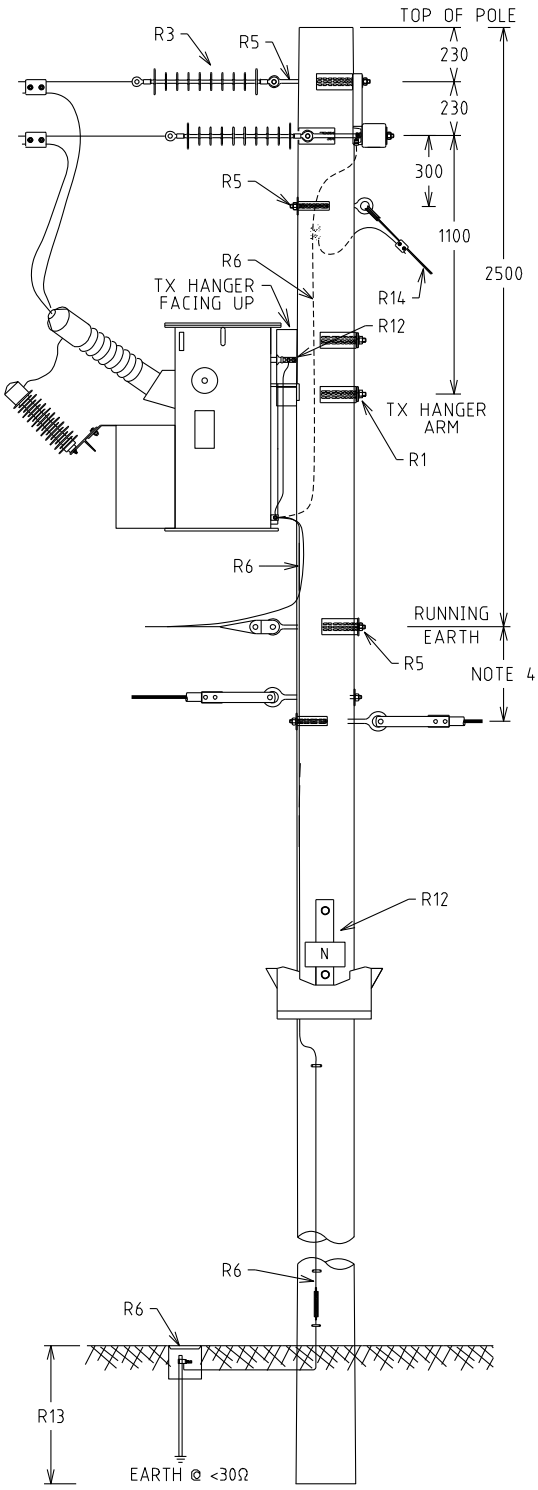

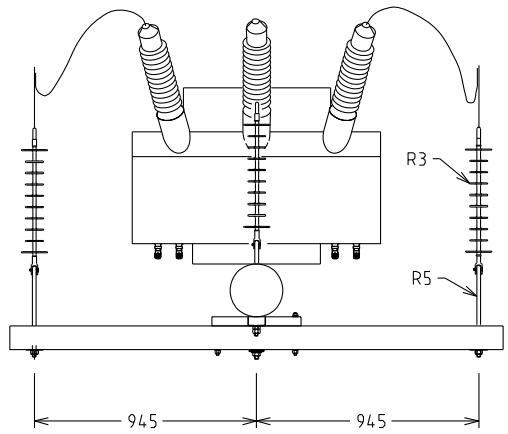

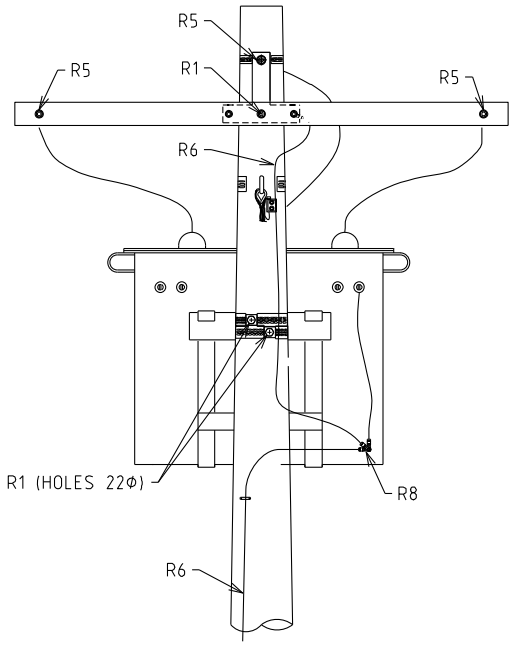

NOTES:
1. ALL DIMENSIONS ARE IN MILLIMETRES.
2. ALL HOLES 18Φ U.O.N.
3. MAXIMUM DISTANCE BETWEEN DOWNEARTH = 600m
4. REFER TO DWG. H01-1 NOTES FOR CLEARANCES BETWEEN RE & LV.

REV.	DATE	DESCRIPTION	ORGD.	CHKD.	APRD.
K	08.12.25	EARTHING TO TOP & DOF CROSSARM ADDED	CO	KT	MM
J	16.11.18	EARTHING SYSTEM MODIFIED & TX MODEL CHANGED	NMc	NN	GS
H	09.08.17	LV UNDERSLUNG SWITCH REVISED	REE	JC	GS
G	15.09.14	NOTE 4 REVISED			GS

STRUCTURE

TITLE

IN-LINE TERMINATION TRANSFORMER

DISTRIBUTION CONSTRN. STANDARD

westernpower

DRAWN: JRR | DATE: 18-03-2014 | DRG. No. H11-1

ORIGINATED: | SCALE: NTS

CHECKED: REE

APPROVED: GRANT STACY | REV K | SHT. 1/1

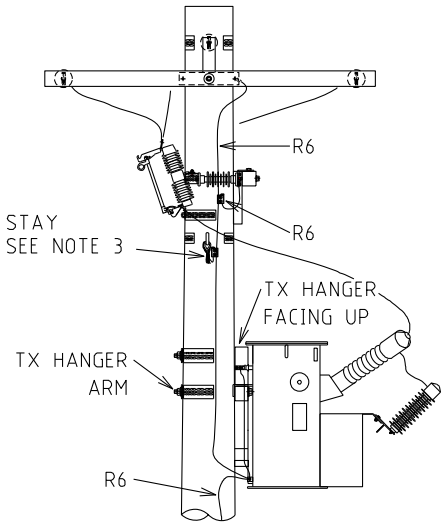

REAR VIEW

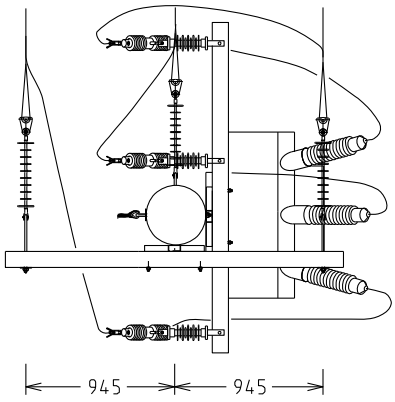

HV ARRANGEMENT

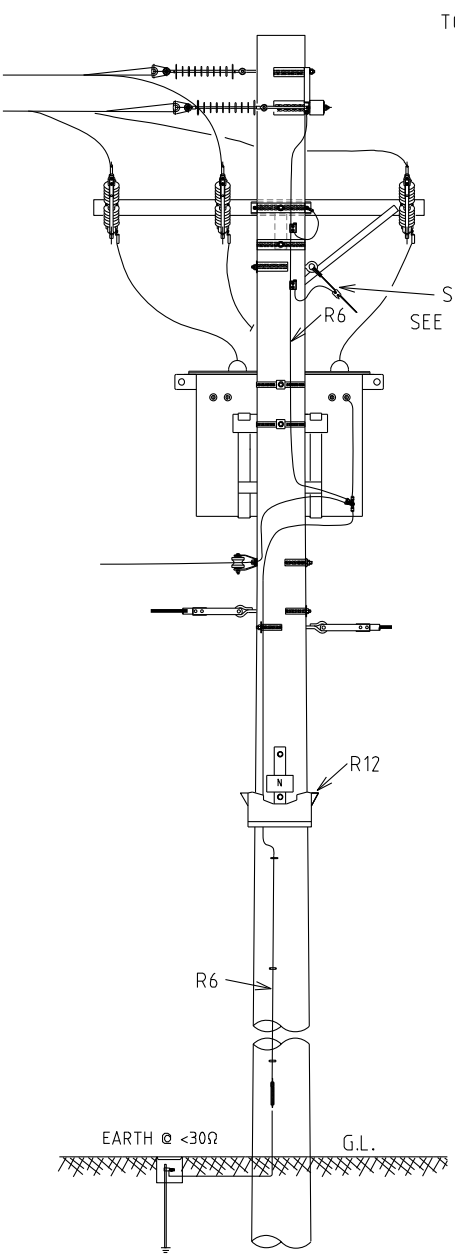

VIEW FROM FOOTPATH

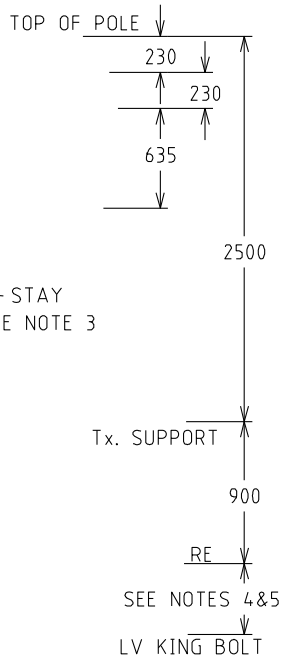

NOTES:
1. ALL DIMENSIONS ARE IN MILLIMETRES.
2. ALL HOLES 18Ø U.O.N.
3. STAY POSITION TO SUIT TAPS, MIN OF 400mm TO NEAREST HV CONDUCTOR.
4. REFER TO DWG. H01-1 NOTES FOR CLEARANCES BETWEEN RE & LV.
5. IF THERE IS NO RUNNING EARTH THIS DISTANCE IS 300.

REV.	DATE	DESCRIPTION	ORGD.	CHKD.	APRD.
I	08.12.25	EARTHING TO TOP & DOF CROSSARM ADDED	CO	KT	MM
H	15.07.22	DOF CROSS-ARM LOCATION CHANGED	NMc	NN	GS
G	16.11.18	EARTHING SYSTEM MODIFIED & TX MODEL CHANGED	NMc	NN	GS
F	09.08.17	LV UNDERSLUNG SWITCH REVISED	REE	JC	GS
E	20.06.17	NOTES REVISED AND DIMENSION 2500 WAS 3350	GS	NMc	GS

STRUCTURE

TITLE: SIDE MOUNTED TERMINATION TRANSFORMER WITH DROPOUT FUSES

DISTRIBUTION CONSTRN. STANDARD

westernpower

DRAWN: JRR | DATE: 18-03-2014 | DRG. No. H11-2

ORIGINATED: | SCALE: NTS

CHECKED: REE

APPROVED: GRANT STACY | REV I | SHT. 1/1

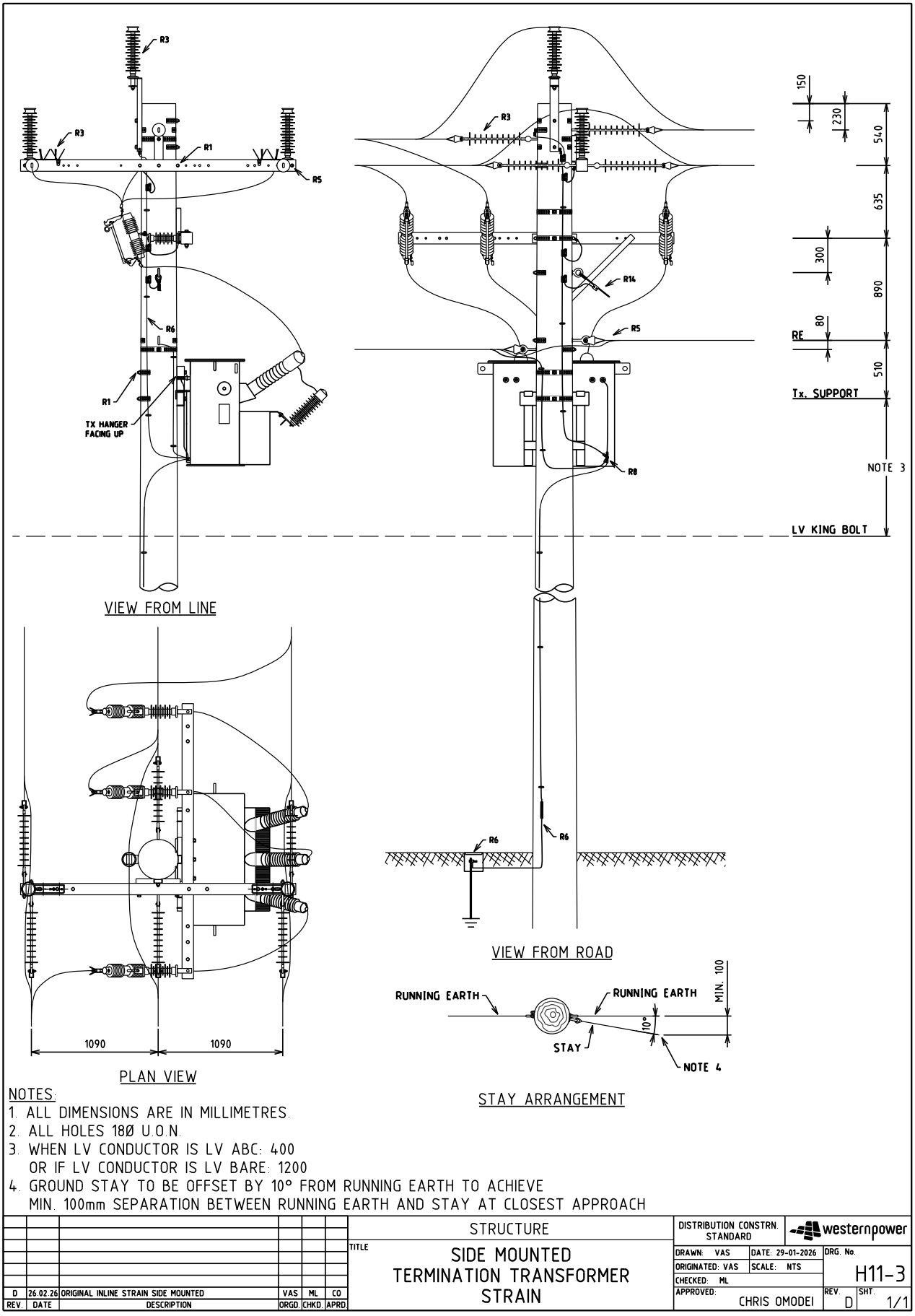

NOTES:
1. ALL DIMENSIONS ARE IN MILLIMETRES.
2. ALL HOLES 18Ø U.O.N.
3. WHEN LV CONDUCTOR IS LV ABC: 400
   OR IF LV CONDUCTOR IS LV BARE: 1200
4. GROUND STAY TO BE OFFSET BY 10° FROM RUNNING EARTH TO ACHIEVE
   MIN. 100mm SEPARATION BETWEEN RUNNING EARTH AND STAY AT CLOSEST APPROACH

REV.	DATE	DESCRIPTION	ORGD.	CHKD.	APRD.
D	26.02.26	ORIGINAL INLINE STRAIN SIDE MOUNTED	VAS	ML	CO

STRUCTURE

TITLE: SIDE MOUNTED TERMINATION TRANSFORMER STRAIN

DISTRIBUTION CONSTRN. STANDARD

westernpower

DRAWN: VAS	DATE: 29-01-2026	DRG. No. H11-3
ORIGINATED: VAS	SCALE: NTS	
CHECKED: ML		
APPROVED: CHRIS OMODEI		REV. D / SHT. 1/1

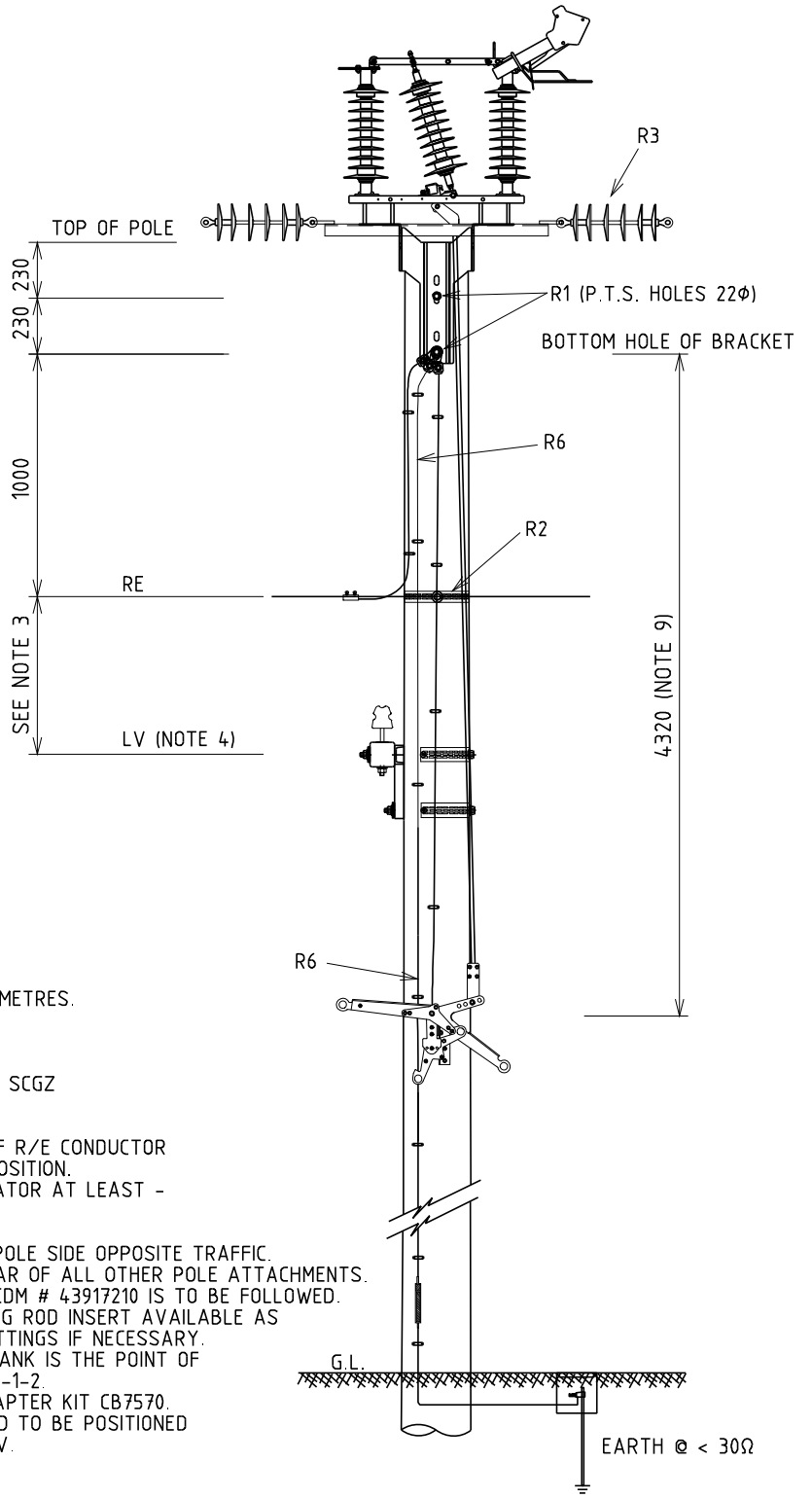

NOTES:-

1. ALL DIMENSIONS ARE IN MILLIMETRES.
2. ALL HOLES 18Ø U.O.N.
3. WHEN LV CONDUCTOR IS;
   (a) LV BARE CONDUCTOR -
   650 IF R/E IS SCAC OR SCGZ
   1100 IF R/E IS AAAC.
   (b) LV ABC
   450 FOR ALL TYPES OF R/E CONDUCTOR
4. IF NO RE, RAISE LV TO RE POSITION.
5. POSITION OF MID POLE ACTUATOR AT LEAST -
   a) 600 BELOW LV
   b) 4000 ABOVE GROUND
6. ACTUATOR PREFERABLE ON POLE SIDE OPPOSITE TRAFFIC.
7. ENSURE OPERATING ROD CLEAR OF ALL OTHER POLE ATTACHMENTS.
8. INSTALLATION INSTRUCTION EDM # 43917210 IS TO BE FOLLOWED.
9. 1200mm EXTENSION OPERATING ROD INSERT AVAILABLE AS REQUIRED TO CLEAR POLE FITTINGS IF NECESSARY.
10. IF TRANSFORMER ON POLE, TANK IS THE POINT OF COMMON CONNECTION. SEE R6-1-2.
11. ON CONCRETE POLES USE ADAPTER KIT CB7570.
12. PVC COVERED OPERATING ROD TO BE POSITIONED WHERE ROD PASSES BARE LV.

REV	DATE	DESCRIPTION	ORGD.	CHKD.	APRD
E	20.09.19	NOTE 12 ADDED	REE	NN	GS
D	29.11.18	NOTE 11 ADDED, EARTHING SYSTEM CHANGED	REE	NN	GS
C	23.01.18	TITLE AND DRAWING NUMBER CHANGED	REE	NMc	GS
B	30.11.17	NOTES REVISED	REE	JC	GS
A	26.10.17	ORIGINAL ISSUE	REE	JC	GS

STRUCTURE

TITLE

POLE TOP SWITCH INCLUDING EARTH

DISTRIBUTION CONSTRN. STANDARD

westernpower

DRAWN: JRR | DATE: 26-10-2017 | DRG. No. H12

ORIGINATED: REE | SCALE: NTS

CHECKED: REE

APPROVED: GRANT STACY | REV. E | SHT.

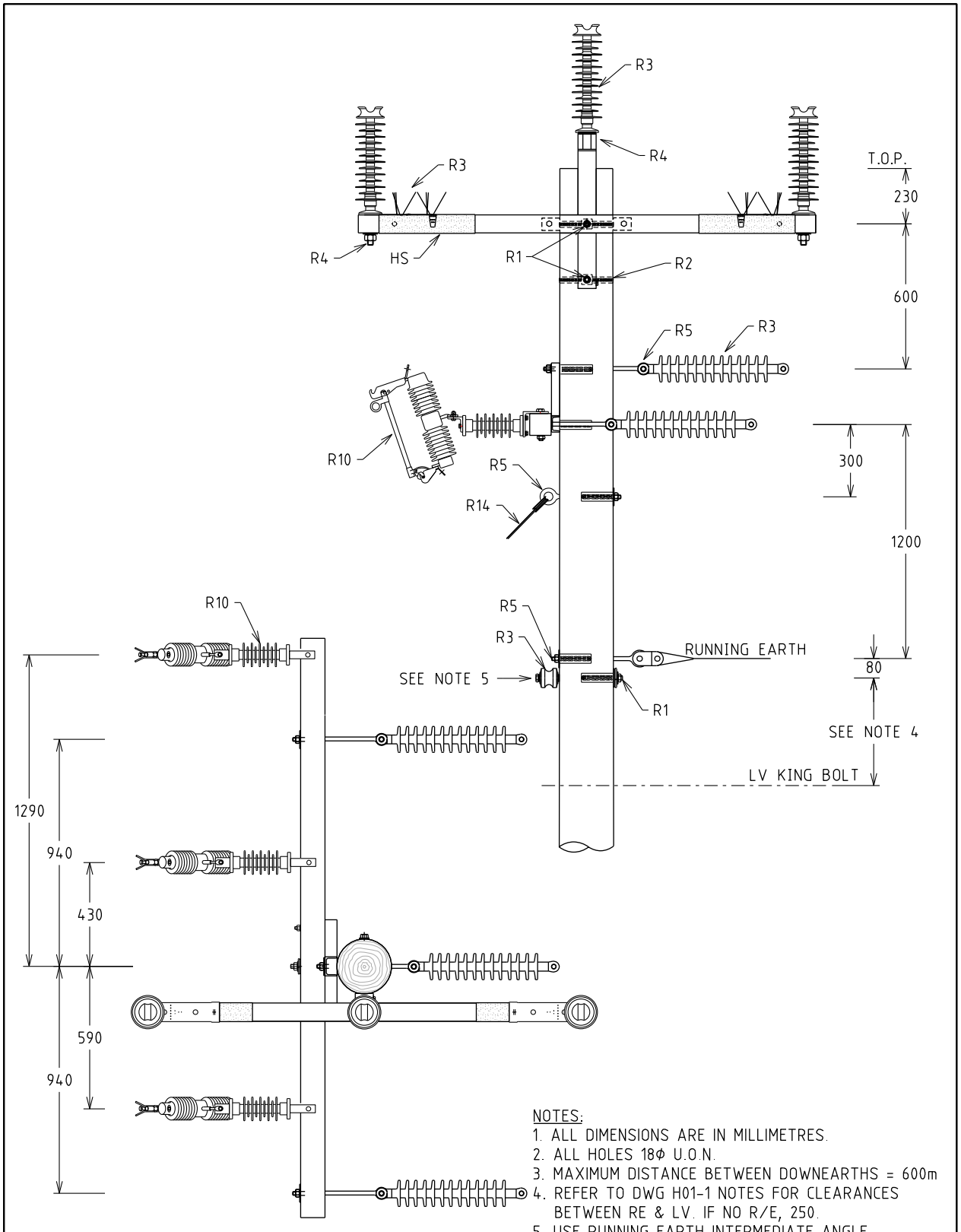

NOTES:
1. ALL DIMENSIONS ARE IN MILLIMETRES.
2. ALL HOLES 18Φ U.O.N.
3. MAXIMUM DISTANCE BETWEEN DOWNEARTHS = 600m
4. REFER TO DWG H01-1 NOTES FOR CLEARANCES BETWEEN RE & LV. IF NO R/E, 250.
5. USE RUNNING EARTH INTERMEDIATE ANGLE, IF DEVIATION ANGLE IS >2°.

REV.	DATE	DESCRIPTION	ORGD.	CHKD.	APRD
F	06.11.25	RE ATTACHMENT LOCATION UPDATED. R3 & R5 UPDATED	KT	NMc	CO
E	02.09.15	DRG # & TITLE CHANGED AND DRAWING REVISED TO SUIT	REE	REE	GS
D	10.02.15	NOTE 5 ADDED	JC	REE	GS
C	15.09.14	NOTE 4 REVISED			GS

STRUCTURE

TITLE

TEE-OFF WITH DROPOUT FUSES

DISTRIBUTION CONSTRN. STANDARD

westernpower

DRAWN: JRR	DATE: 18-03-2014	DRG. No.	
ORIGINATED:	SCALE: NTS	H13-1	
CHECKED: REE			
APPROVED: GRANT STACY		REV. F	SHT. 1/1

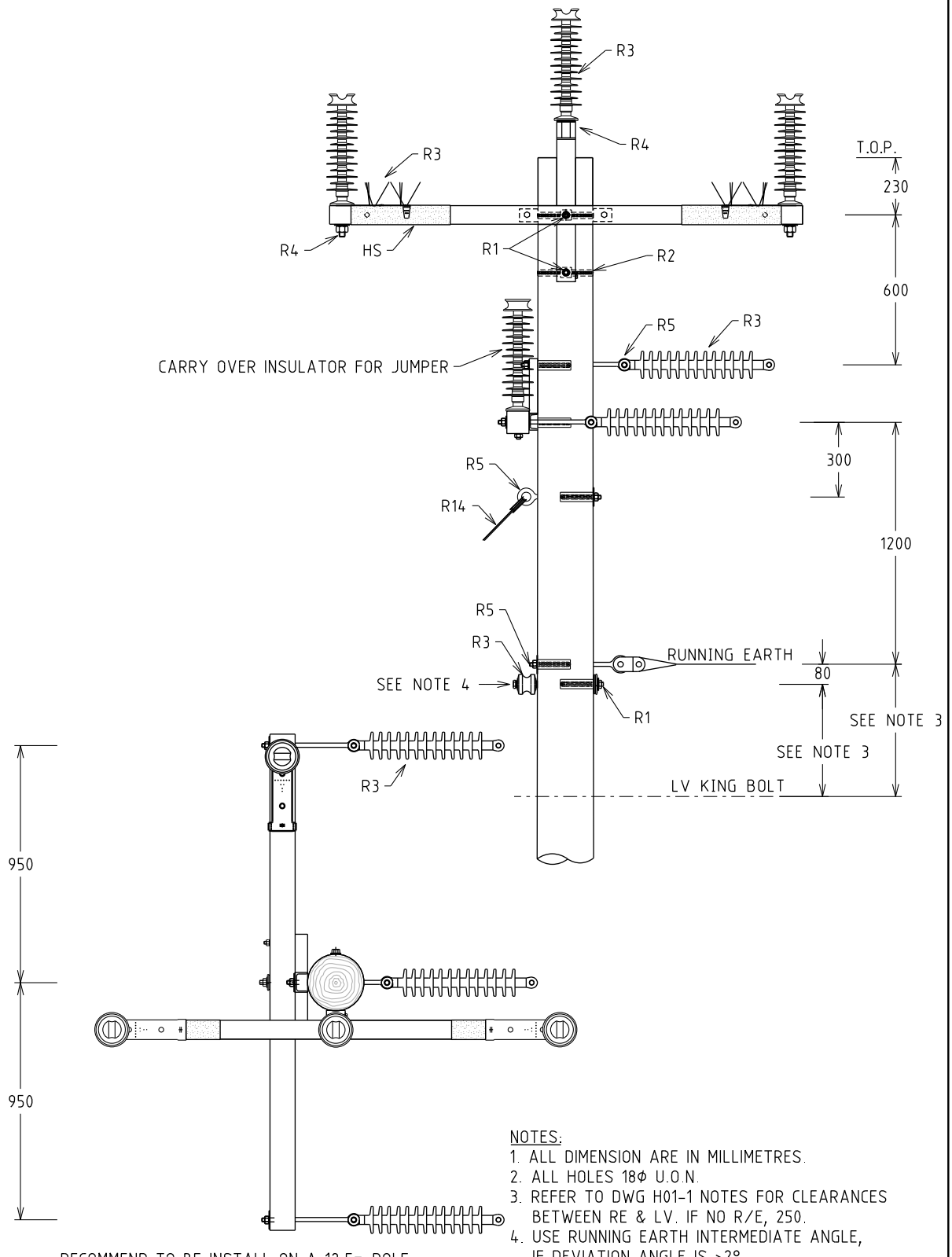

NOTES:
1. ALL DIMENSION ARE IN MILLIMETRES.
2. ALL HOLES 18ϕ U.O.N.
3. REFER TO DWG H01-1 NOTES FOR CLEARANCES BETWEEN RE & LV. IF NO R/E, 250.
4. USE RUNNING EARTH INTERMEDIATE ANGLE, IF DEVIATION ANGLE IS >2°.

REV.	DATE	DESCRIPTION	ORGD.	CHKD.	APRD
C	06.11.25	RE ATTACHMENT LOCATION UPDATED. R3 & R5 UPDATED	KT	NMc	CO
B	19.12.17	NOTES REVISED	JC	REE	GS
A	02.09.15	ORIGINAL ISSUE	REE	REE	GS

STRUCTURE

TITLE

TEE-OFF WITHOUT DROPOUT FUSES

DISTRIBUTION CONSTRN. STANDARD

westernpower

DRAWN: JRR | DATE: 11-06-2015 | DRG. No. H13-2

ORIGINATED: REE | SCALE: NTS

CHECKED: REE

APPROVED: GRANT STACY | REV. C | SHT. 1/1

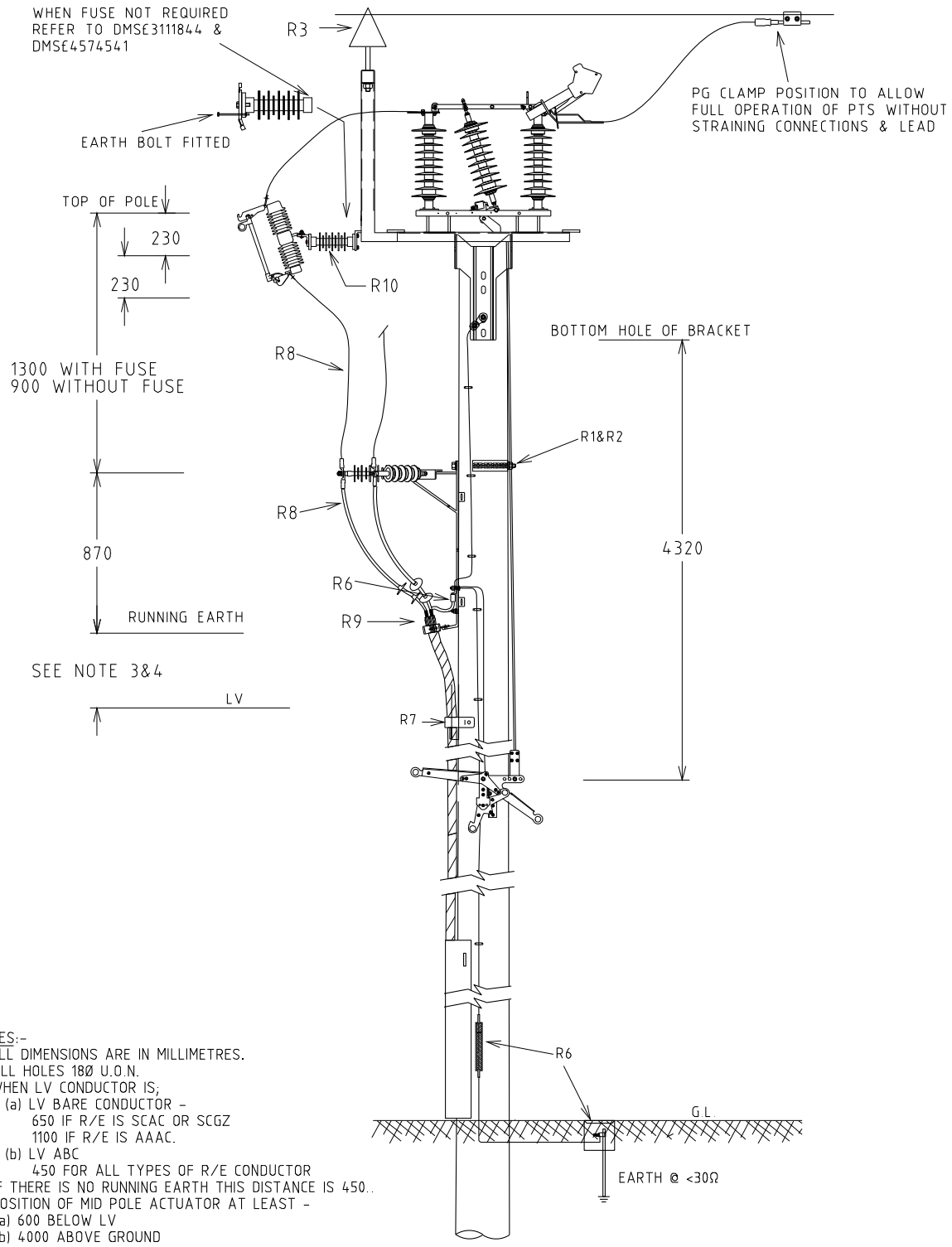

NOTES:-
1. ALL DIMENSIONS ARE IN MILLIMETRES.
2. ALL HOLES 18Ø U.O.N.
3. WHEN LV CONDUCTOR IS;
   (a) LV BARE CONDUCTOR –
   650 IF R/E IS SCAC OR SCGZ
   1100 IF R/E IS AAAC.
   (b) LV ABC
   450 FOR ALL TYPES OF R/E CONDUCTOR
4. IF THERE IS NO RUNNING EARTH THIS DISTANCE IS 450..
5. POSITION OF MID POLE ACTUATOR AT LEAST –
   a) 600 BELOW LV
   b) 4000 ABOVE GROUND
6. ACTUATOR PREFERABLE ON POLE SIDE OPPOSITE TRAFFIC.
7. ENSURE OPERATING ROD CLEAR OF ALL OTHER POLE ATTACHMENTS.
8. INSTALLATION INSTRUCTION EDM# 43917210 IS TO BE FOLLOWED.

REV	DATE	DESCRIPTION	ORGD.	CHKD.	APRD
C	29.11.18	NOTE 8 ADDED	REE	NN	GS
B	19.06.18	EARTHING CONNECTION AND HANDLE DIMENSION CHANGED	REE	NMc	GS
A	31.01.18	ORIGINAL ISSUE	REE	JC	GS

STRUCTURE

TITLE
COMBINATION SWITCH & FUSE
WITH RAISER (FLY-OVER SWITCH)

DISTRIBUTION CONSTRN. STANDARD

westernpower

DRAWN: JRR | DATE: 09-01-2018 | DRG. No. H14-1
ORIGINATED: REE | SCALE: NTS
CHECKED: JC
APPROVED: GRANT STACY | REV. C | SHT.

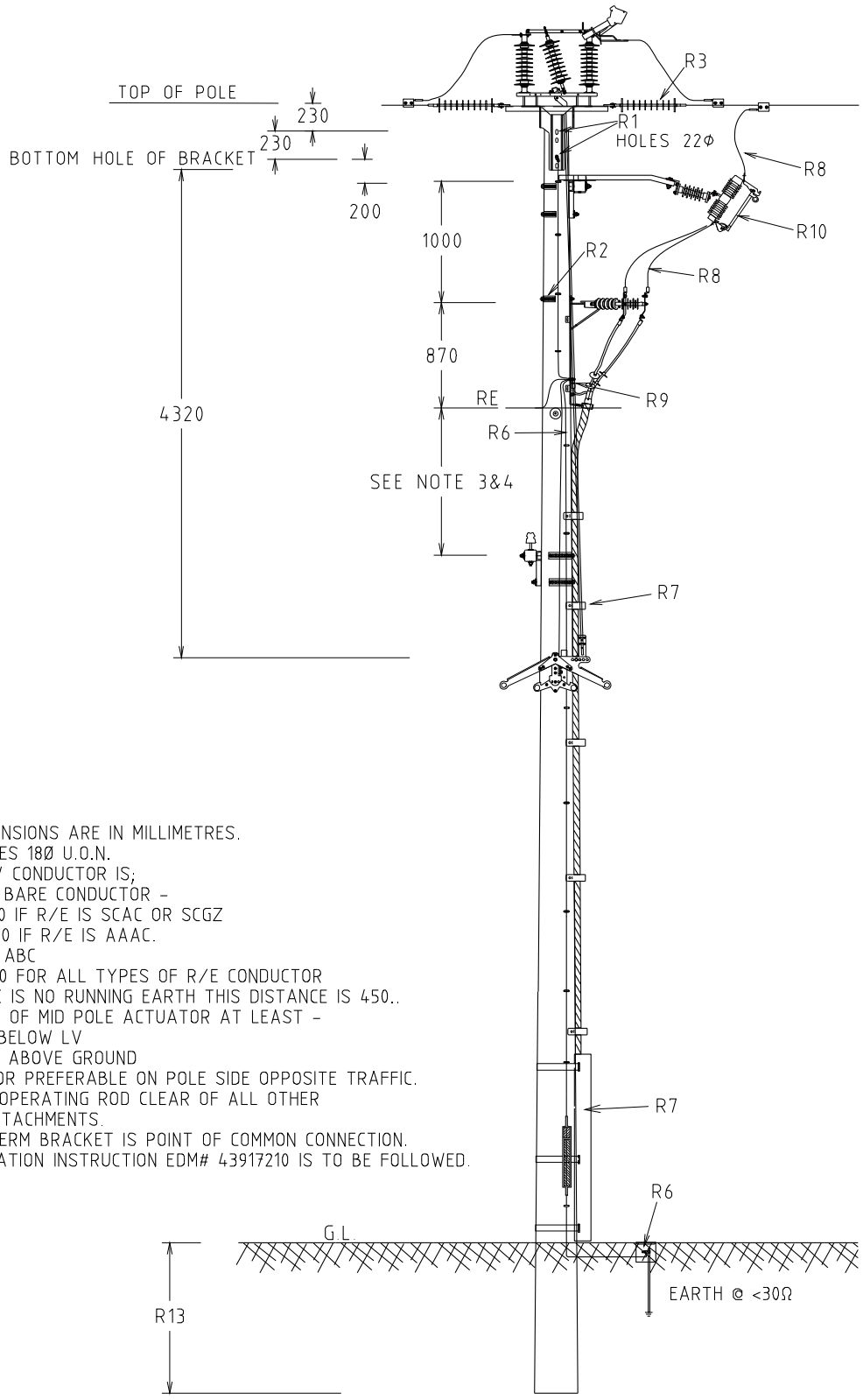

NOTES:-
1. ALL DIMENSIONS ARE IN MILLIMETRES.
2. ALL HOLES 18Ø U.O.N.
3. WHEN LV CONDUCTOR IS;
   (a) LV BARE CONDUCTOR –
   650 IF R/E IS SCAC OR SCGZ
   1100 IF R/E IS AAAC.
   (b) LV ABC
   450 FOR ALL TYPES OF R/E CONDUCTOR
4. IF THERE IS NO RUNNING EARTH THIS DISTANCE IS 450..
5. POSITION OF MID POLE ACTUATOR AT LEAST –
   a) 600 BELOW LV
   b) 4000 ABOVE GROUND
6. ACTUATOR PREFERABLE ON POLE SIDE OPPOSITE TRAFFIC.
7. ENSURE OPERATING ROD CLEAR OF ALL OTHER POLE ATTACHMENTS.
8. CABLE TERM BRACKET IS POINT OF COMMON CONNECTION.
9. INSTALLATION INSTRUCTION EDM# 43917210 IS TO BE FOLLOWED.

REV	DATE	DESCRIPTION	ORGD.	CHKD.	APRD
B	19.06.18	EARTHING SYSTEM AND HANDLE DIMENSION CHANGED	REE	NMc	GS
A	23.01.18	ORIGINAL ISSUE	REE	JC	GS

STRUCTURE

TITLE

COMBINATION SWITCH & FUSE

DISTRIBUTION CONSTRN. STANDARD

westernpower

DRAWN: JRR | DATE: 09-01-2018 | DRG. No. H14-2

ORIGINATED: REE | SCALE: NTS

CHECKED: JC

APPROVED: GRANT STACY | REV. B | SHT.

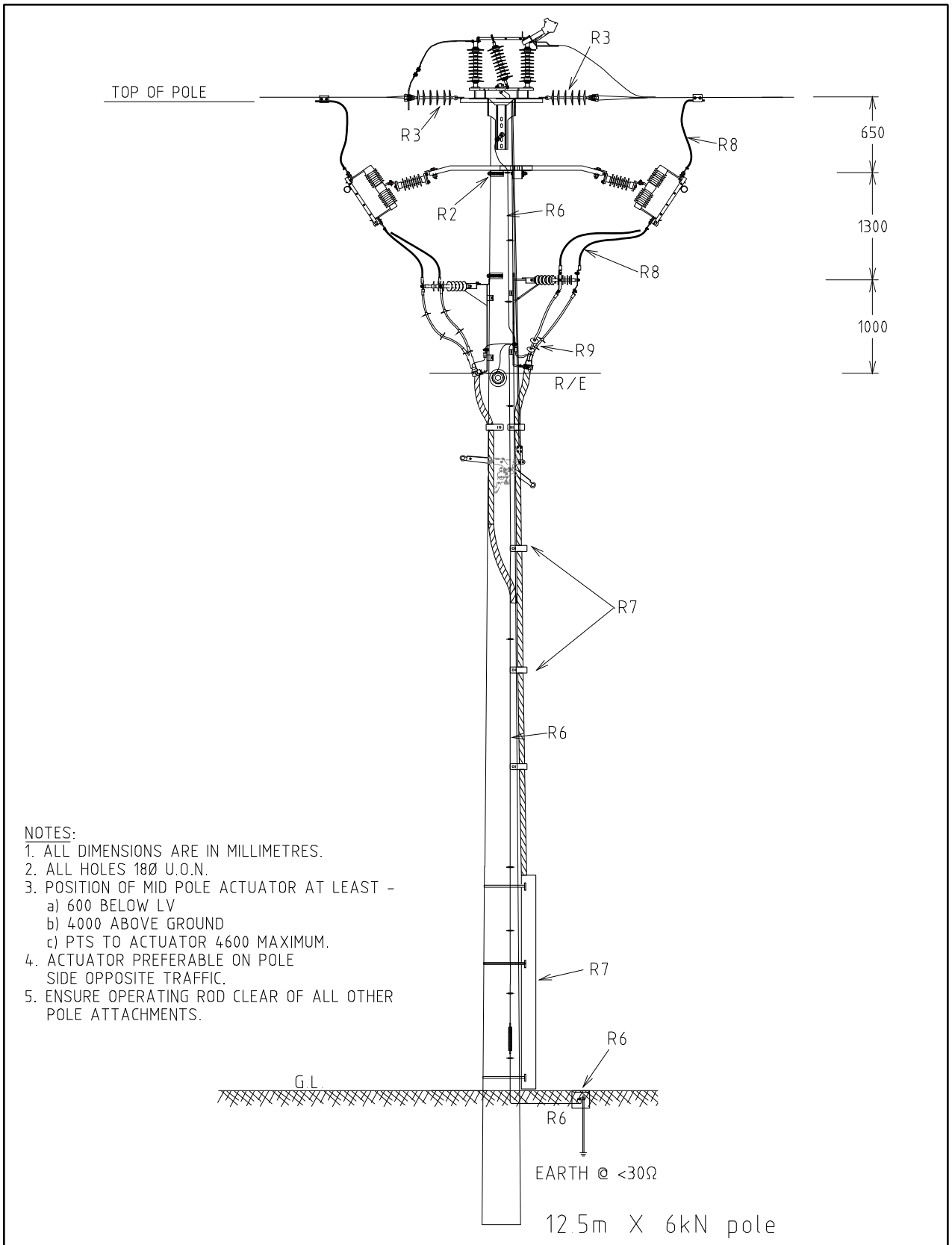

NOTES:
1. ALL DIMENSIONS ARE IN MILLIMETRES.
2. ALL HOLES 18Ø U.O.N.
3. POSITION OF MID POLE ACTUATOR AT LEAST -
   a) 600 BELOW LV
   b) 4000 ABOVE GROUND
   c) PTS TO ACTUATOR 4600 MAXIMUM.
4. ACTUATOR PREFERABLE ON POLE SIDE OPPOSITE TRAFFIC.
5. ENSURE OPERATING ROD CLEAR OF ALL OTHER POLE ATTACHMENTS.

REV.	DATE	DESCRIPTION	ORGD.	CHKD.	APRD.
D	31.01.18	PTS TYPE CHANGED	REE	JC	GS
C	16 11 17	NOTES ADDED	REE	JC	GS

STRUCTURE

TITLE

PTS & FUSES/ISOLATORS
LAYOUT FOR 2 CABLES

DISTRIBUTION CONSTRN. STANDARD

westernpower

DRAWN JRR	DATE: 18-03-2014	DRG. No. H14-3
ORIGINATED	SCALE: NTS	
CHECKED: REE		
APPROVED: GRANT STACY		REV D SHT

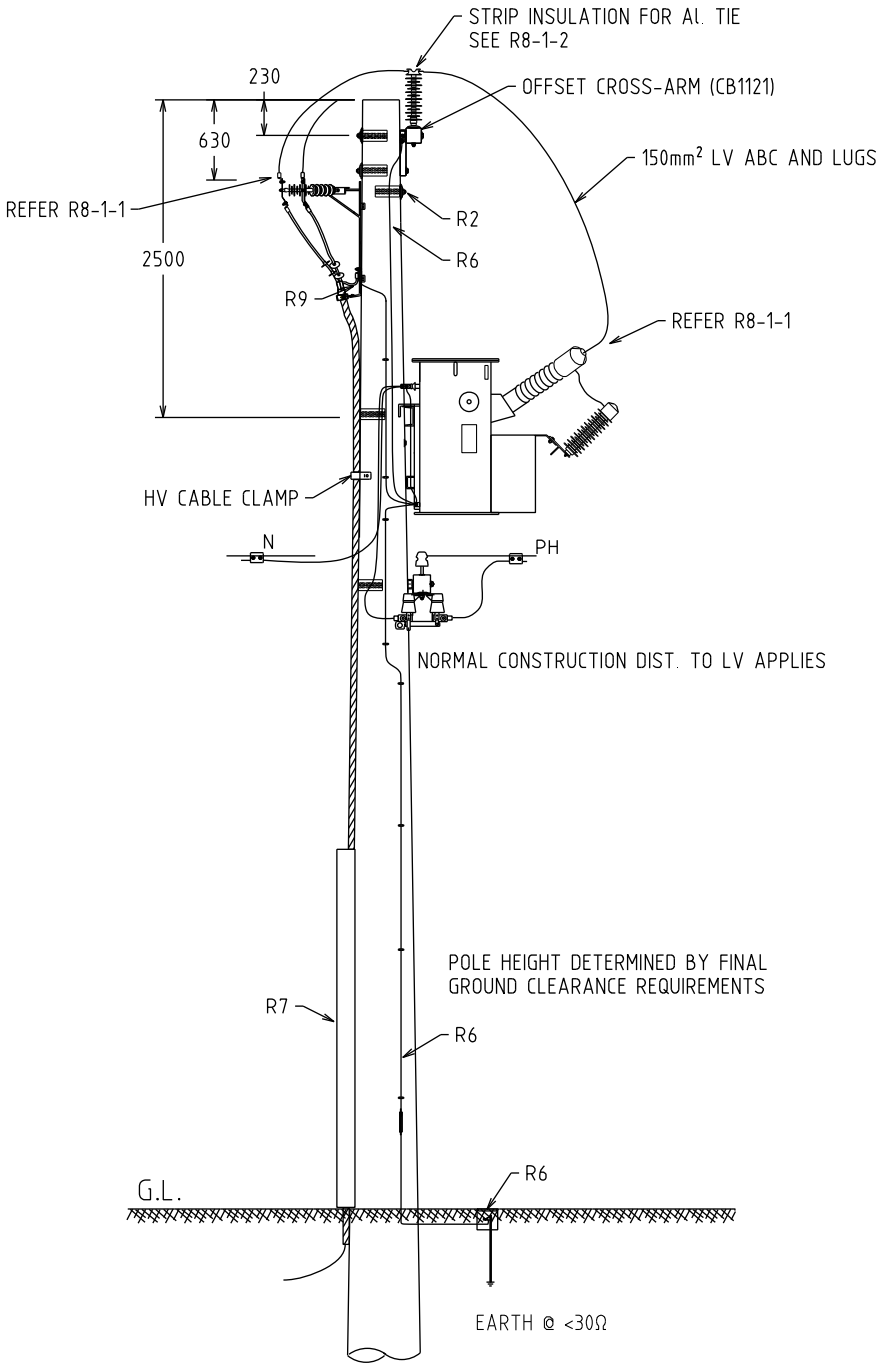

NOTES:
1. ALL DIMENSIONS ARE IN MILLIMETRES.
2. ALL HOLES 18Ø UON.
3. CROSS ARM NOT TO BE EARTHED.

REV.	DATE	DESCRIPTION	ORGD.	CHKD.	APRD
D	16.12.25	POLE TOP EARTHING ADDED	CO	KT	MM
C	05.02.24	STRIP REFERENCE UPDATED	NMc	SH	CO
B	16.11.18	EARTHING SYSTEM MODIFIED & TX MODEL CHANGED	NMc	NN	REE
A	20.11.13	ORIGINAL ISSUE			

STRUCTURE

TITLE

TRANSFORMER CABLE SUPPLIED

DISTRIBUTION CONSTRN. STANDARD

westernpower

DRAWN: JRR | DATE: 19-03-2014 | DRG. No. H17-4

ORIGINATED: | SCALE: NTS

CHECKED: REE

APPROVED: GRANT STACY | REV. D | SHT. 1/1

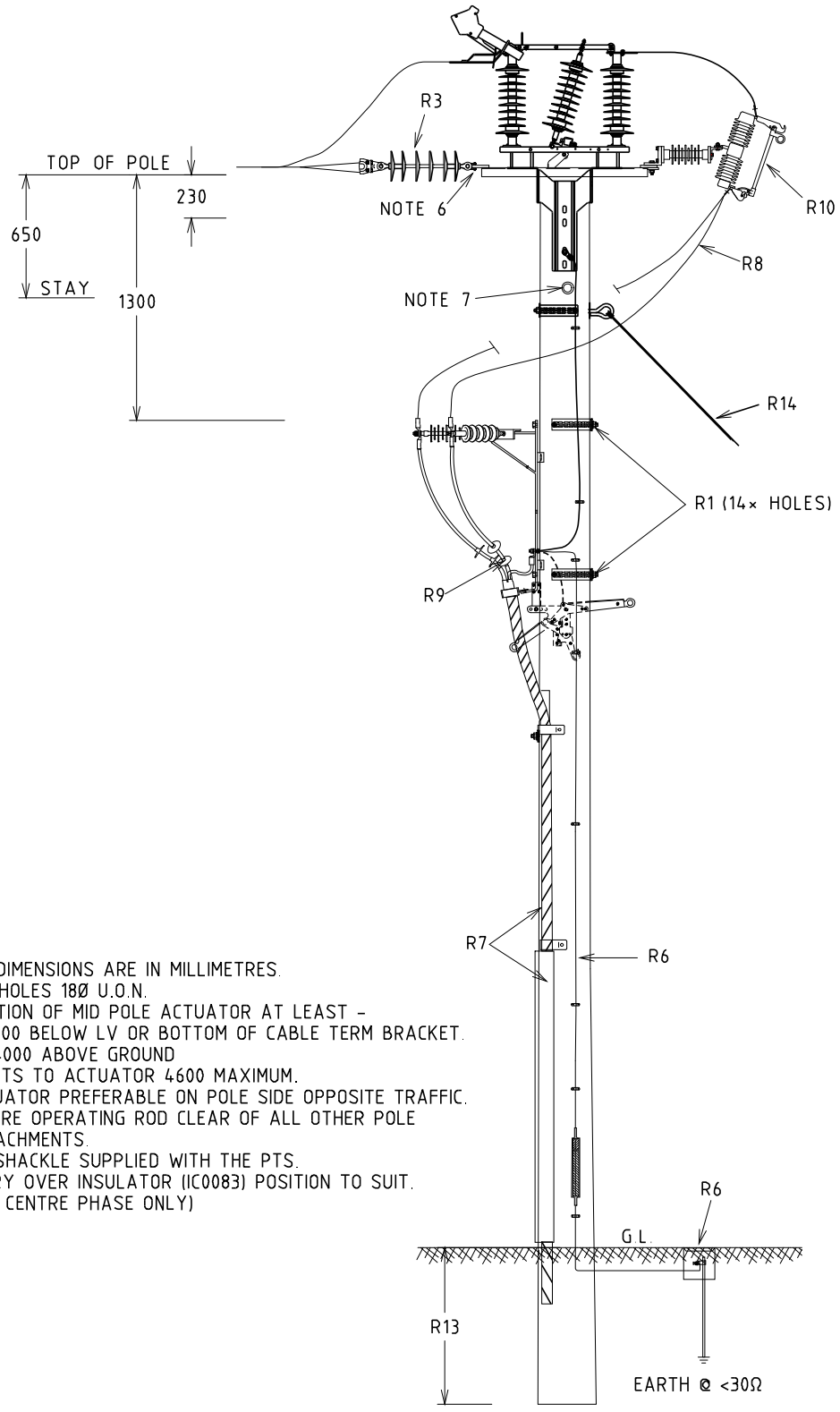

NOTES:
1. ALL DIMENSIONS ARE IN MILLIMETRES.
2. ALL HOLES 18Ø U.O.N.
3. POSITION OF MID POLE ACTUATOR AT LEAST –
   a) 600 BELOW LV OR BOTTOM OF CABLE TERM BRACKET.
   b) 4000 ABOVE GROUND
   c) PTS TO ACTUATOR 4600 MAXIMUM.
4. ACTUATOR PREFERABLE ON POLE SIDE OPPOSITE TRAFFIC.
5. ENSURE OPERATING ROD CLEAR OF ALL OTHER POLE ATTACHMENTS.
6. "D" SHACKLE SUPPLIED WITH THE PTS.
7. CARRY OVER INSULATOR (IC0083) POSITION TO SUIT. (FOR CENTRE PHASE ONLY)

REV	DATE	DESCRIPTION	ORGD.	CHKD.	APRD
E	03.12.20	EARTHING AND DOF INSTALLATION METHOD MODIFIED	REE	NMc	GS
D	31.01.18	PTS TYPE CHANGED	REE	JC	GS
C	16.11.17	NOTES REVISED	REE	JC	GS
B	23.03.16	STAY ADDED	JC	REE	GS
A	20.11.13	ORIGINAL ISSUE			

STRUCTURE

TITLE: TERMINATION POLE TOP SWITCH WITH CABLE & DROPOUT FUSE

DISTRIBUTION CONSTRN. STANDARD

westernpower

DRAWN: JRR | DATE: 20-03-2014 | DRG. No. H18

ORIGINATED: | SCALE: NTS

CHECKED: REE

APPROVED: GRANT STACY | REV. E | SHT.

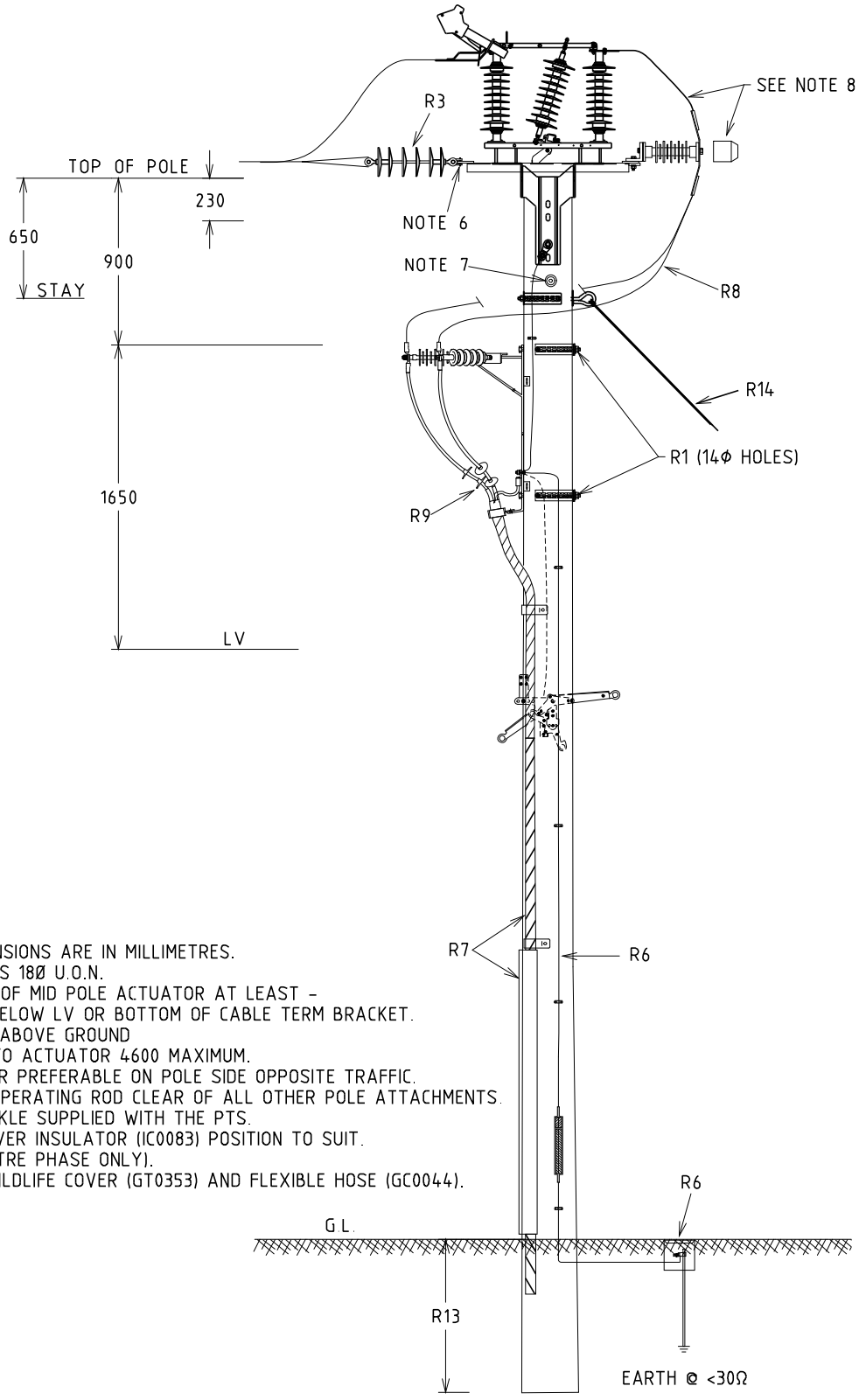

NOTES:
1. ALL DIMENSIONS ARE IN MILLIMETRES.
2. ALL HOLES 18Ø U.O.N.
3. POSITION OF MID POLE ACTUATOR AT LEAST –
   a) 600 BELOW LV OR BOTTOM OF CABLE TERM BRACKET.
   b) 4000 ABOVE GROUND
   c) PTS TO ACTUATOR 4600 MAXIMUM.
4. ACTUATOR PREFERABLE ON POLE SIDE OPPOSITE TRAFFIC.
5. ENSURE OPERATING ROD CLEAR OF ALL OTHER POLE ATTACHMENTS.
6. "D" SHACKLE SUPPLIED WITH THE PTS.
7. CARRY OVER INSULATOR (IC0083) POSITION TO SUIT. (FOR CENTRE PHASE ONLY).
8. APPLY WILDLIFE COVER (GT0353) AND FLEXIBLE HOSE (GC0044).

REV	DATE	DESCRIPTION	ORGD.	CHKD.	APRD
E	03.12.20	EARTHING & SURGE ARRESTOR INSTA. METHOD MODIFIED	REE	NMc	GS
D	31.01.18	PTS TYPE CHANGED	REE	JC	GS
C	16.11.17	NOTES REVISED	REE	JC	GS
B	23.03.16	STAY ADDED, DWG. No AND TITLE CHANGED	JC	REE	GS

STRUCTURE

TITLE
TERMINATION POLE TOP SWITCH WITH CABLE ARRANGEMENT

DISTRIBUTION CONSTRN. STANDARD

westernpower

DRAWN: JRR | DATE: 20-03-2014 | DRG. No. H19
ORIGINATED: | SCALE: NTS
CHECKED: REE
APPROVED: GRANT STACY | REV. E | SHT.

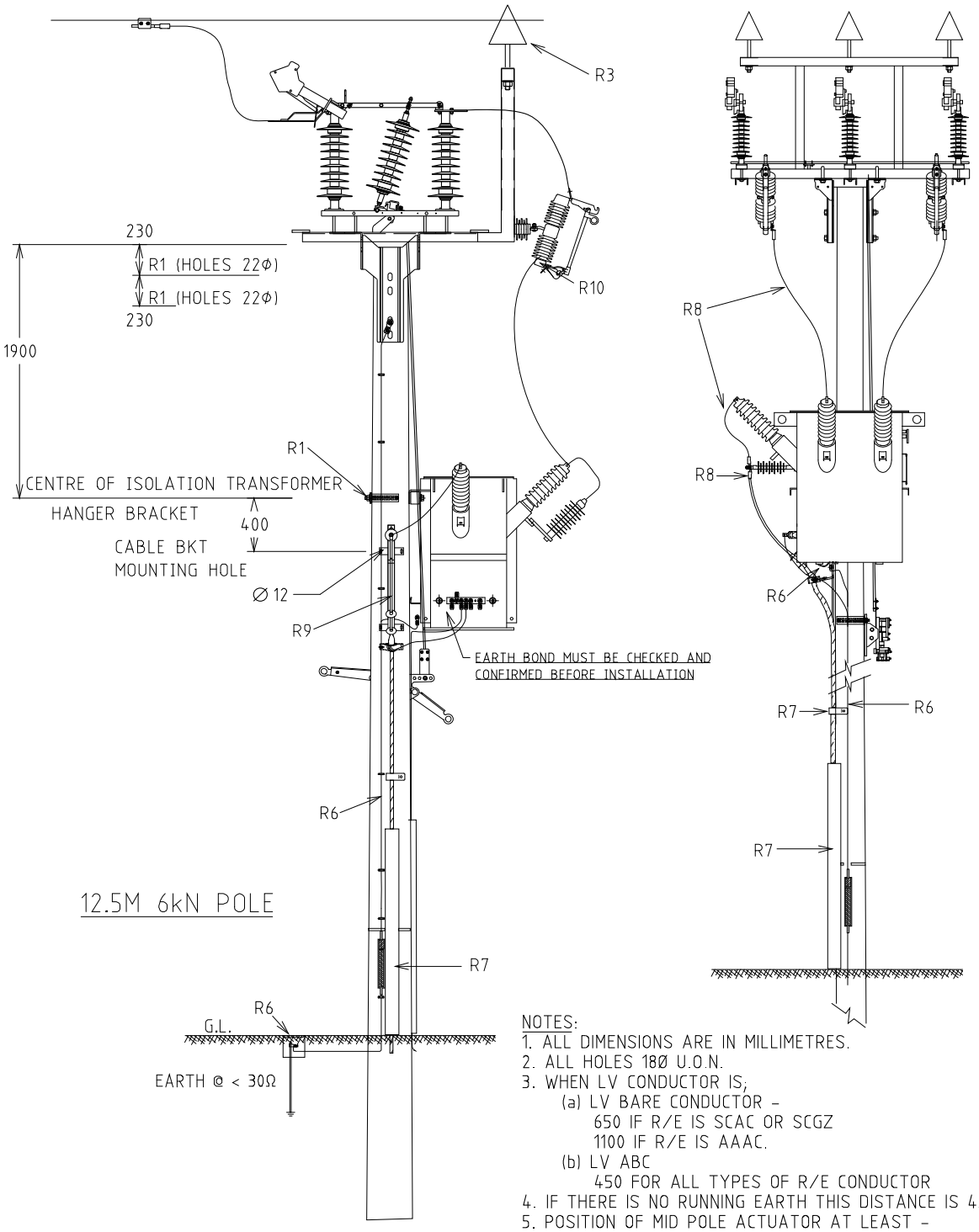

NOTES:
1. ALL DIMENSIONS ARE IN MILLIMETRES.
2. ALL HOLES 18Ø U.O.N.
3. WHEN LV CONDUCTOR IS;
   (a) LV BARE CONDUCTOR –
   650 IF R/E IS SCAC OR SCGZ
   1100 IF R/E IS AAAC.
   (b) LV ABC
   450 FOR ALL TYPES OF R/E CONDUCTOR
4. IF THERE IS NO RUNNING EARTH THIS DISTANCE IS 450..
5. POSITION OF MID POLE ACTUATOR AT LEAST –
   a) 600 BELOW LV
   b) 4000 ABOVE GROUND
   c) PTS TO ACTUATOR 4600 MAXIMUM.
6. ACTUATOR PREFERABLE ON POLE SIDE OPPOSITE TRAFFIC.
7. ENSURE OPERATING ROD CLEAR OF ALL OTHER POLE ATTACHMENTS.

REV	DATE	DESCRIPTION	ORGD.	CHKD.	APRD.
E	31.01.18	PTS TYPE CHANGED	REE	JC	GS
D	16.11.17	TITLE AND DRAWING NUMBER CHANGED	REE	JC	GS
C	20.03.14	FORMAT CHANGED			GS
B	20.11.13	ORIGINAL ISSUE			

STRUCTURE

TITLE

ISOLATION TRANSFORMER

DISTRIBUTION CONSTRN. STANDARD

westernpower

DRAWN: JRR | DATE: 20-03-2014 | DRG. No. H20-1

ORIGINATED: | SCALE: NTS

CHECKED: REE

APPROVED: GRANT STACY | REV. E | SHT.

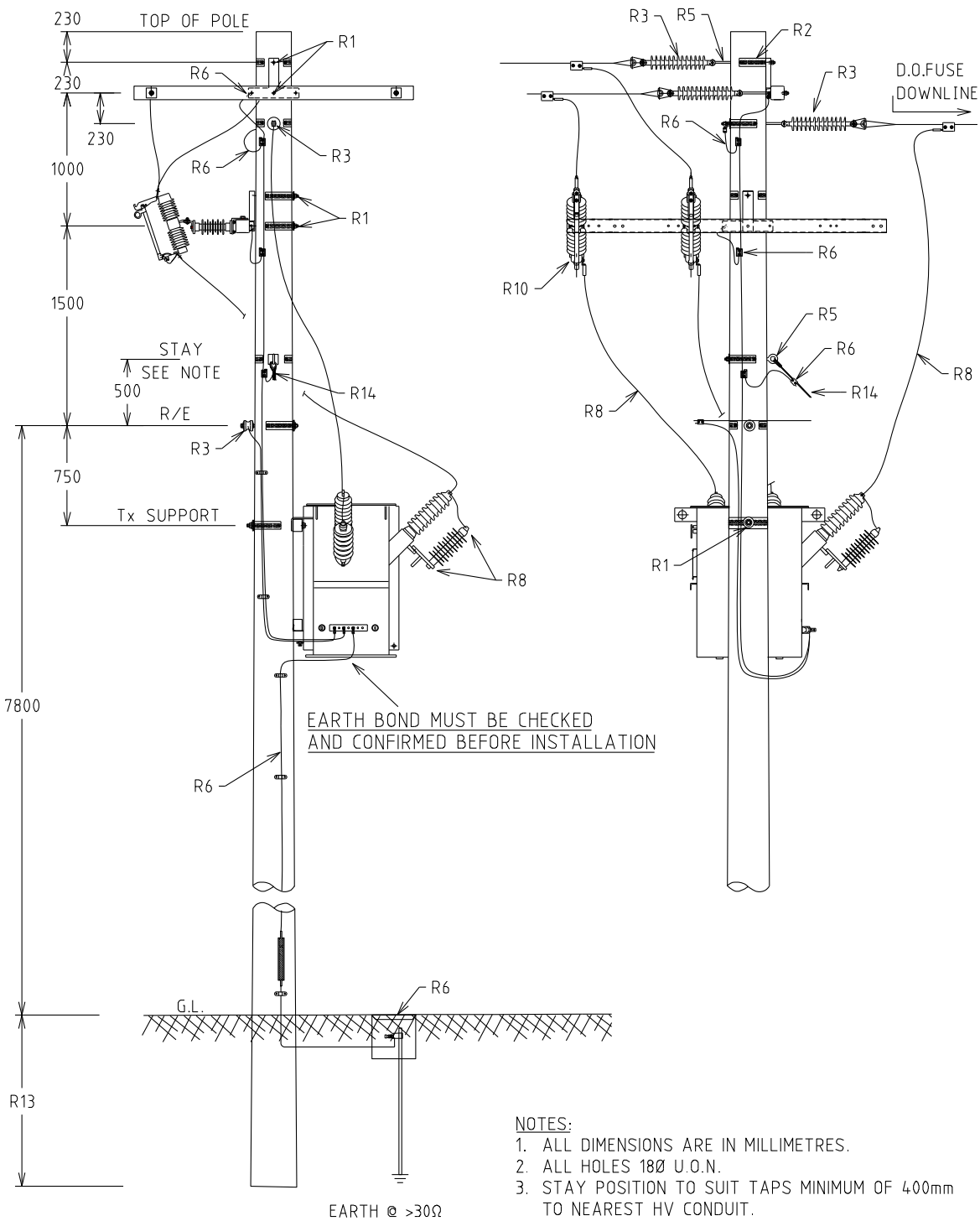

12.5M 6kN POLE COUNTRY NETWORKS

NOTES:
1. ALL DIMENSIONS ARE IN MILLIMETRES.
2. ALL HOLES 18Ø U.O.N.
3. STAY POSITION TO SUIT TAPS MINIMUM OF 400mm TO NEAREST HV CONDUIT.
4. MAXIMUM DISTANCE BETWEEN DOWNEARTHS = 600m.
5. DO NOT INSTALL DOF ON THE LOAD SIDE IF 1PH RECLOSER IS INSTALLED DOWNSTREAM.
6. PLANNING ENGINEERS TO BE CONSULTED TO DETERMINE FUSE GRADING.

REV.	DATE	DESCRIPTION	DRGD.	CHKD.	APRD.
F	08.12.25	POLE TOP EARTHING ADDED. R5 UPDATED	CO	KT	MM
E	31.07.17	TITLE CHANGED	CO	NMc	GS
D	20.03.14	FORMAT CHANGED			GS
C	20.11.13	ORIGINAL ISSUE			

STRUCTURE

TITLE

ISOLATION TRANSFORMER 3 PH TERMINATION 1 PH IN-LINE WITHOUT 1 PH DROPOUT FUSE

DISTRIBUTION CONSTRN. STANDARD

westernpower

DRAWN: JRR | DATE: 20-03-2014 | DRG. No. H20-2

ORIGINATED: | SCALE: NTS

CHECKED: REE

APPROVED: GRANT STACY | REV F | SHT. 1/1

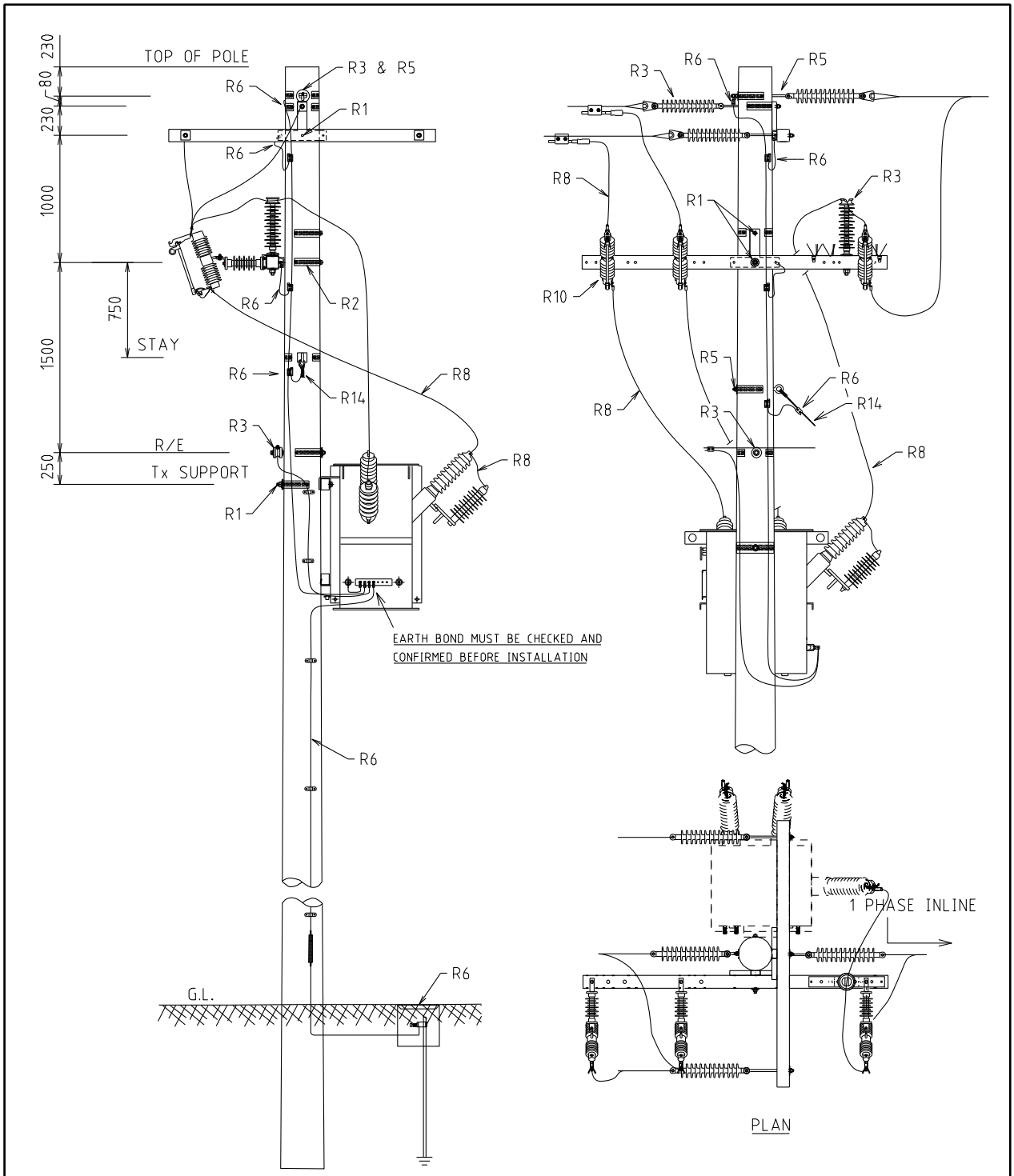

NOTES:
1. ALL DIMENSIONS ARE IN MILLIMETRES.
2. ALL HOLES 18Φ U.O.N.
3. MAXIMUM DISTANCE BETWEEN DOWNEARTHS = 600m.
4. DO NOT INSTALL DOF ON THE LOAD SIDE IF 1PH RECLOSER IS INSTALLED DOWNSTREAM.
5. PLANNING ENGINEERS TO BE CONSULTED TO DETERMINE FUSE GRADING

REV.	DATE	DESCRIPTION	DRGD.	CHKD.	APRD.
E	08.12.25	POLE TOP EARTHING ADDED. R3 & R5 UPDATED	CO	KT	MM
D	20.03.14	FORMAT CHANGED	CO	REE	GS
C	20.11.13	ORIGINAL ISSUE			

STRUCTURE

TITLE: ISOLATION TRANSFORMER 3 PH TERMINATION 1 PH IN-LINE WITH DROPOUT FUSE

DISTRIBUTION CONSTRN. STANDARD

westernpower

DRAWN: JRR | DATE: 30-03-2014 | DRG. No. H20-3

ORIGINATED: | SCALE: NTS

CHECKED: REE

APPROVED: GRANT STACY | REV E | SHT. 1/1

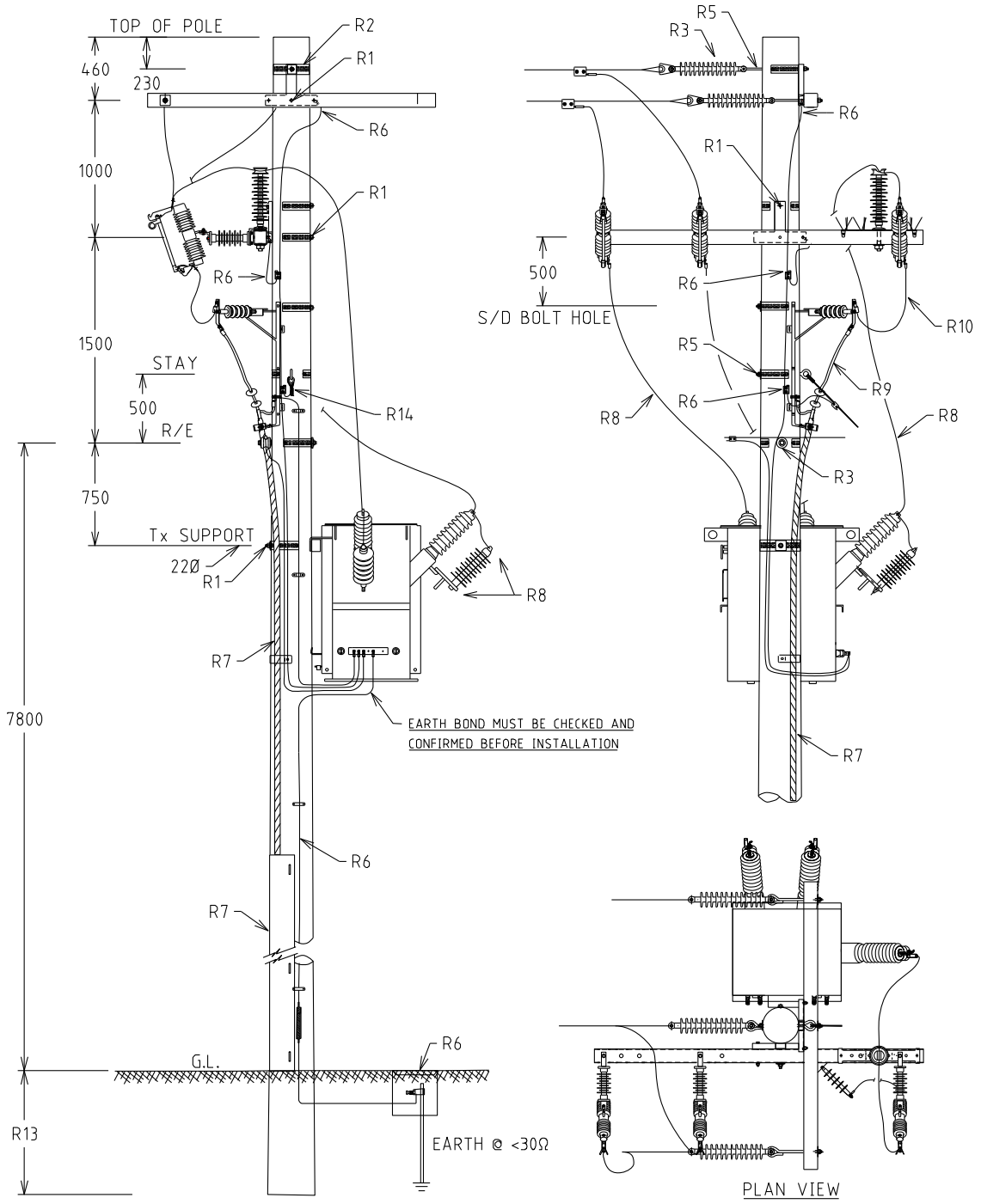

12.5M 6kN POLE COUNTRY NETWORKS

NOTES:
1. ALL DIMENSIONS ARE IN MILLIMETRES.
2. ALL HOLES 18Ø U.O.N.
3. MAXIMUM DISTANCE BETWEEN DOWNEARTHS = 600m.
4. DO NOT INSTALL DOF ON THE LOAD SIDE IF 1PH RECLOSER IS INSTALLED DOWNSTREAM.
5. PLANNING ENGINEERS TO BE CONSULTED TO DETERMINE FUSE GRADING

REV.	DATE	DESCRIPTION	ORGD.	CHKD.	APRD.
E	08.12.25	POLE TOP EARTHING ADDED. R3 & R5 UPDATED	CO	KT	MM
D	20.03.14	FORMAT CHANGED			GS
C	20.11.13	ORIGINAL ISSUE			

STRUCTURE

TITLE: ISOLATION TRANSFORMER 3 PH TERMINATION 1 PH IN-LINE WITH/WITHOUT DROPOUT FUSE

DISTRIBUTION CONSTRN. STANDARD

westernpower

DRAWN: JRR | DATE: 20-03-2014 | DRG. No. H20-4

ORIGINATED: | SCALE: NTS

CHECKED: REE

APPROVED: GRANT STACY | REV E | SHT. 1/1

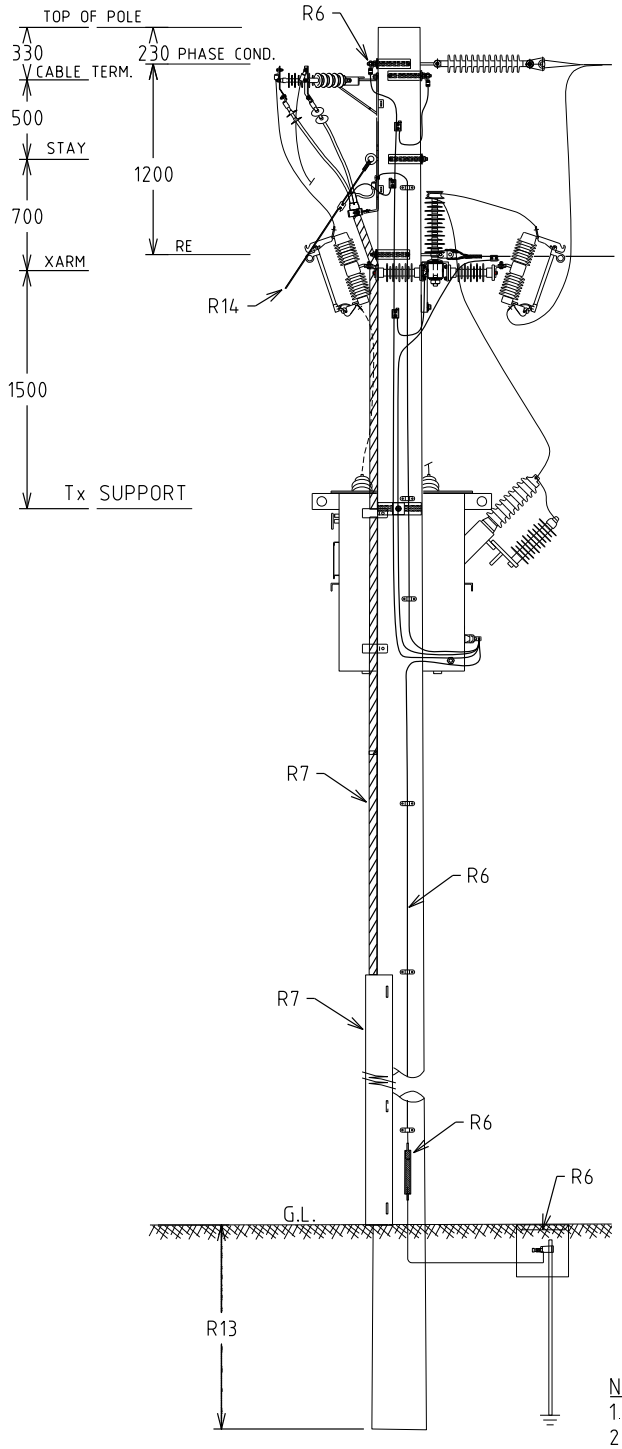

EARTH @ <30Ω

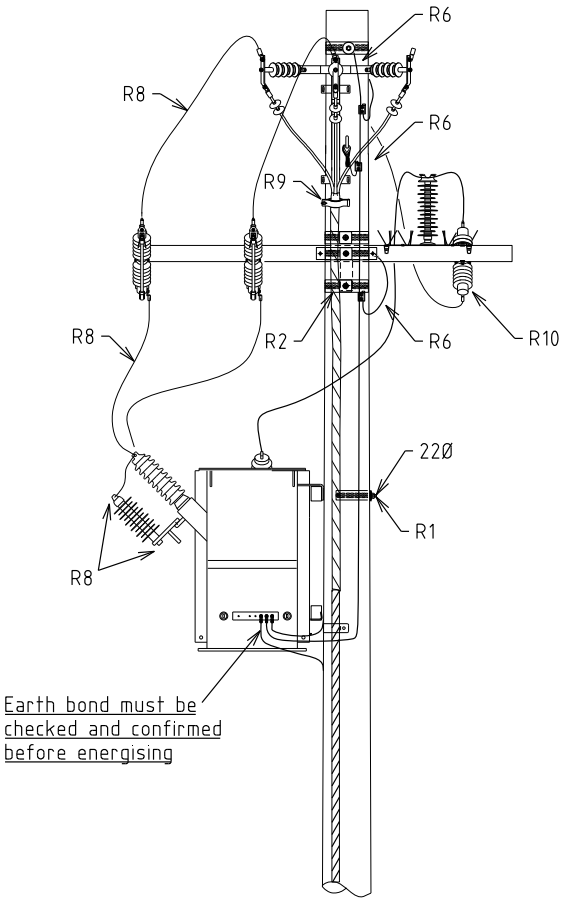

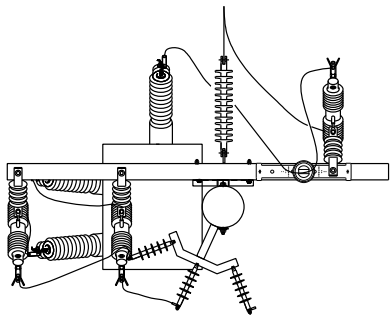

PLAN VIEW

NOTES:
1. ALL DIMENSIONS ARE IN MILLIMETRES.
2. HOLES 18Ø U.O.N.
3. R9 - CABLE TERM. BRACKET OFFSET TO INSTALL STAY.
4. MAXIMUM DISTANCE BETWEEN DOWNEARTHS = 600m.
5. DO NOT INSTALL DOF ON THE LOAD SIDE IF 1PH RECLOSER IS INSTALLED DOWNSTREAM.
6. PLANNING ENGINEERS TO BE CONSULTED TO DETERMINE FUSE GRADING

REV.	DATE	DESCRIPTION	ORGD.	CHKD.	APRD.
G	10.12.25	POLE TOP EARTHING ADDED. R3 & R5 UPDATED	CO	KT	MM
F	21.09.18	EARTH & LIVE LINE CONNECTION METHOD MODIFIED	NMc	NN	GS
E	30.04.15	FORMAT AND TRANSFORMER LOCATION CHANGED	CO	AK	GS
D	23.05.13	ORIGINAL ISSUE			

STRUCTURE

TITLE: ISOLATION TRANSFORMER 3 PH CABLE / 1 PH TEE-OFF WITH DROPOUT FUSE / LINK

DISTRIBUTION CONSTRN. STANDARD

westernpower

DRAWN: JRR | DATE: 20-03-2014 | DRG. No. H20-5

ORIGINATED: | SCALE: NTS

CHECKED: CO

APPROVED: GRANT STACY | REV. G | SHT. 1/1

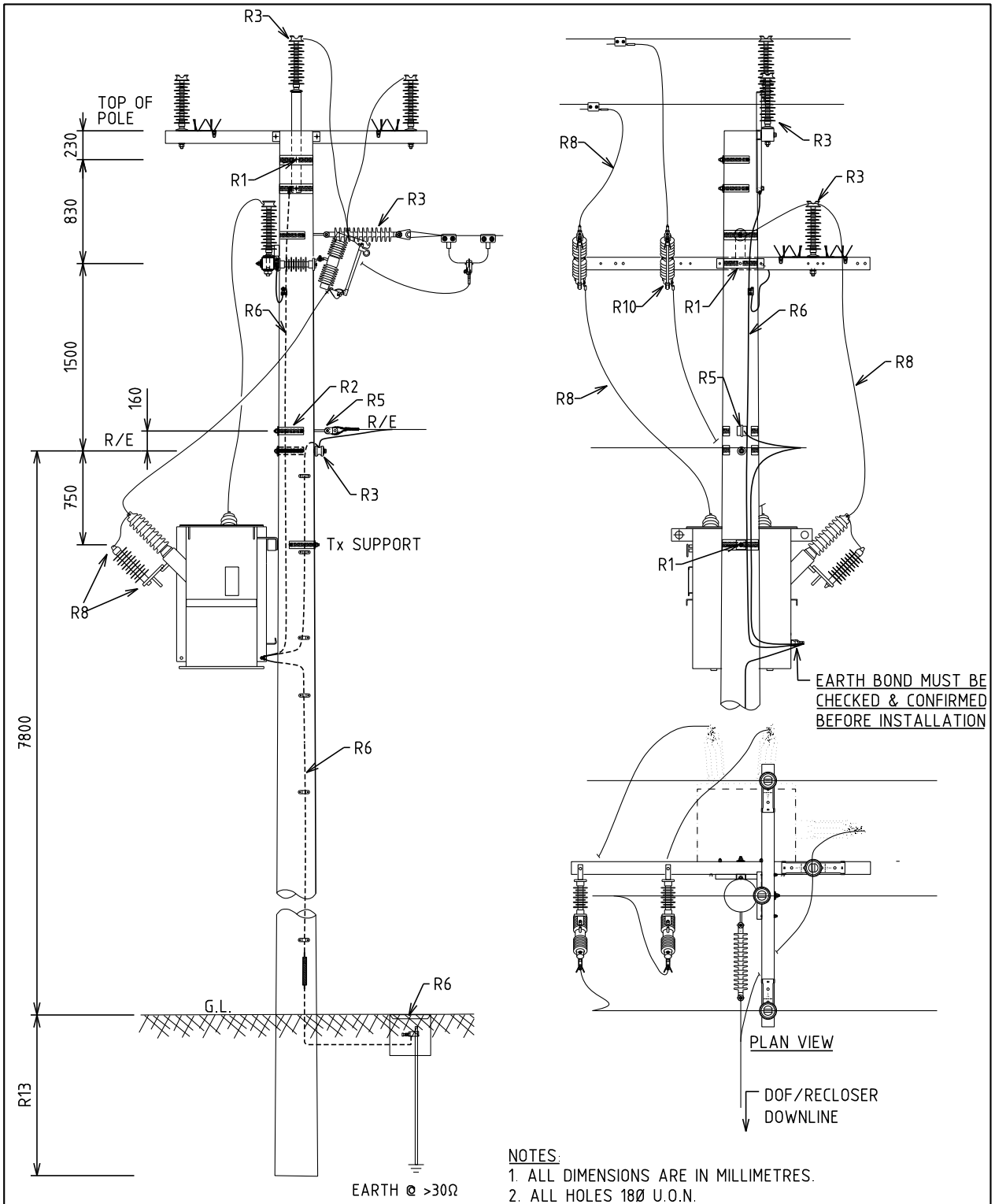

12.5M 6kN POLE COUNTRY NETWORKS

NOTES:
1. ALL DIMENSIONS ARE IN MILLIMETRES.
2. ALL HOLES 18Ø U.O.N.
3. MAXIMUM DISTANCE BETWEEN DOWNEARTHS = 600m
4. DO NOT INSTALL DOF ON THE LOAD SIDE IF 1PH RECLOSER IS INSTALLED DOWNSTREAM.
5. PLANNING ENGINEERS TO BE CONSULTED TO DETERMINE FUSE GRADING.

REV.	DATE	DESCRIPTION	ORGD.	CHKD.	APRD.
F	02.11.26	R6 LABEL ADDED	CO	NMc	MM
E	10.12.25	POLE TOP EARTHING ADDED. R3 & R5 UPDATED	CO	KT	MM
D	20.03.14	FORMAT CHANGED			GS
C	20.07.11	ORIGINAL ISSUE			

TITLE: STRUCTURE
ISOLATION TRANSFORMER
3 PH IN-LINE / 1 PH TEE-OFF
WITHOUT DROPOUT FUSE

DISTRIBUTION CONSTRN. STANDARD

westernpower

DRAWN: JRR	DATE: 20-03-2014	DRG. No. H20-6
ORIGINATED:	SCALE: NTS	
CHECKED: REE		
APPROVED: GRANT STACY	REV. F	SHT. 1/1

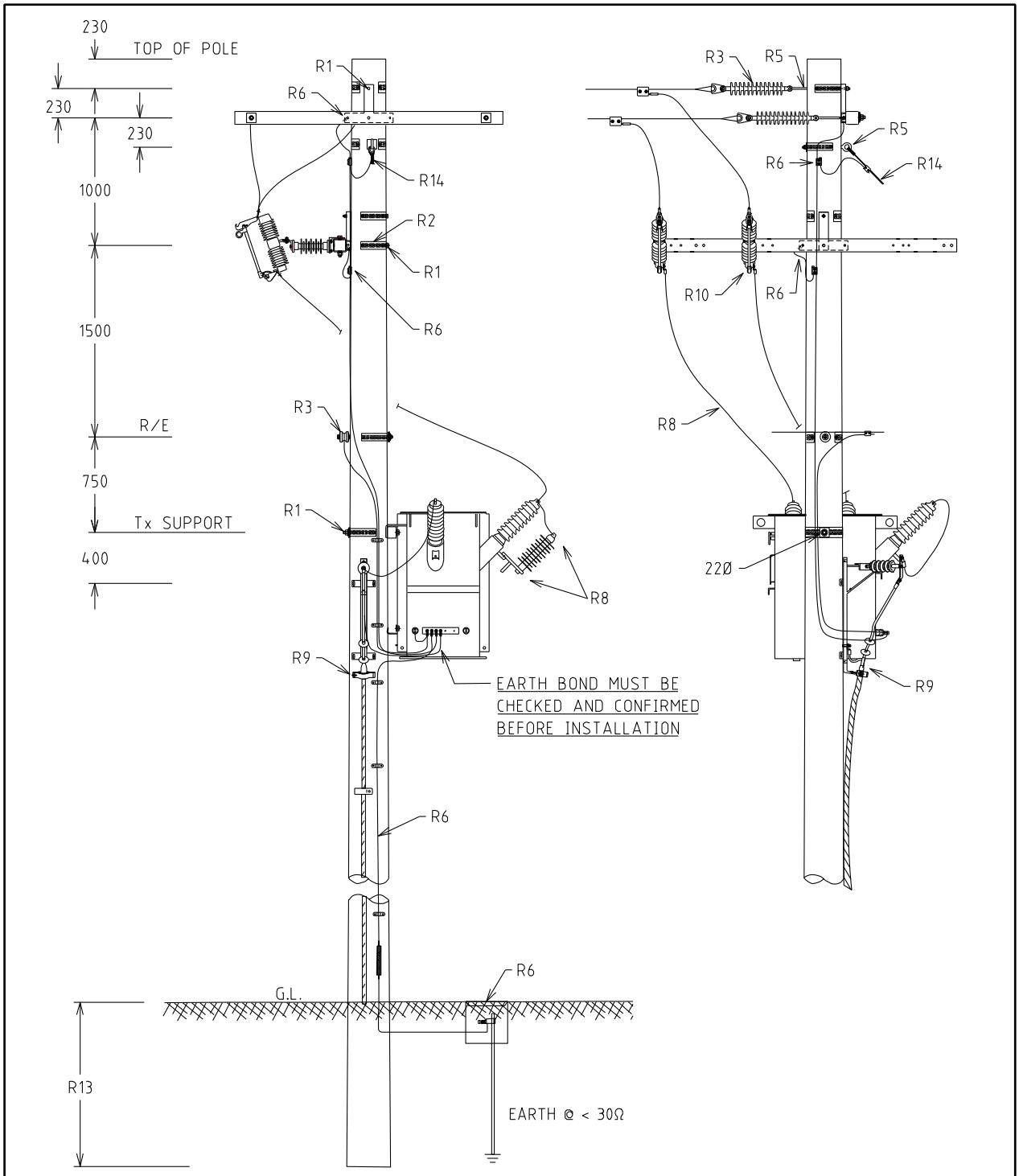

12.5M 6kN POLE COUNTRY NETWORKS

NOTES:
1. ALL DIMENSIONS ARE IN MILLIMETRES.
2. ALL HOLES 18Φ U.O.N.
3. MAXIMUM DISTANCE BETWEEN DOWNEARTHS = 600m
4. DO NOT INSTALL DOF ON THE LOAD SIDE IF 1PH RECLOSER IS INSTALLED DOWNSTREAM.
5. PLANNING ENGINEERS TO BE CONSULTED TO DETERMINE FUSE GRADING

REV.	DATE	DESCRIPTION	ORGD.	CHKD.	APRD.
E	08.12.25	POLE TOP EARTHING ADDED. R5 UPDATED	CO	KT	MM
D	20.03.14	FORMAT CHANGED			GS
C	23.05.13	ORIGINAL ISSUE			

STRUCTURE

TITLE: ISOLATION TRANSFORMER 3 PH TERMINATION / 1 PH CABLE WITH DROPOUT FUSE

DISTRIBUTION CONSTRN. STANDARD

westernpower

DRAWN: JRR | DATE: 20-03-2014 | DRG. No. H20-7

ORIGINATED: | SCALE: NTS

CHECKED: REE

APPROVED: GRANT STACY | REV E | SHT. 1/1

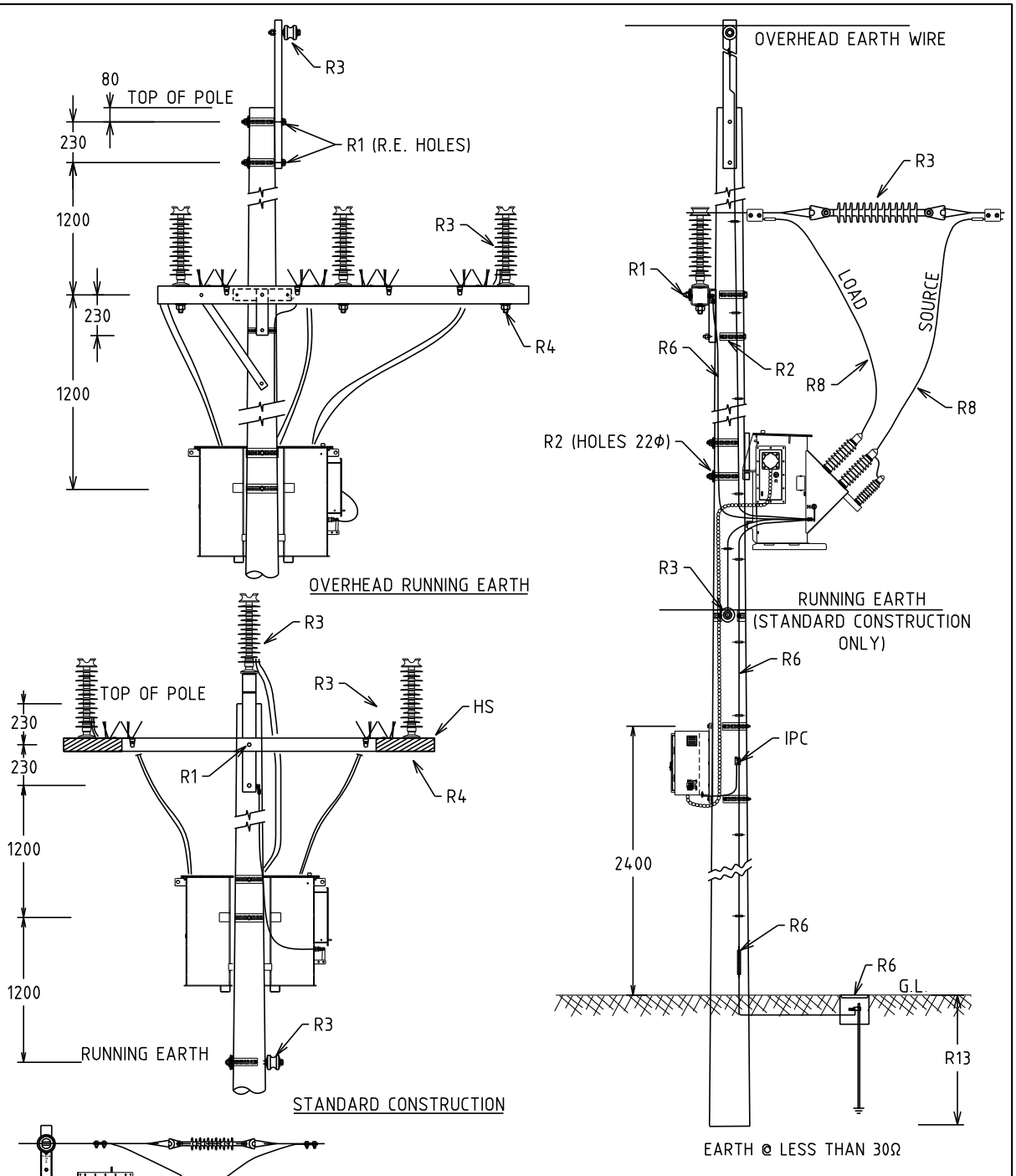

NOTES:
1. ALL DIMENSIONS ARE IN MILLIMETRES.
2. A1 TERMINAL CLOSEST TO SOURCE
   A2 TERMINAL CLOSEST TO LOAD
   ---> CURRENT FLOW FROM A1 to A2
3. ALL HOLES 18Φ U.O.N.
4. MAXIMUM DISTANCE BETWEEN DOWNEARTHS = 600m.

REV.	DATE	DESCRIPTION	ORGD.	CHKD.	APRD.
F	02.11.26	R6 LABEL ADDED	CO	NMc	MM
E	08.12.25	POLE TOP EARTHING ADDED. R3 UPDATED	CO	KT	MM
D	13.05.21	TRANSFORMER TYPE & METERING CUBICLE UPDATED	CO	REE	GS
C	31.05.16	SPECIFIED THE SOURCE AND LOAD	ME	REE	GS
B	20.03.14	FORMAT CHANGED			GS

STRUCTURE

TITLE

METERING TRANSFORMER

DISTRIBUTION CONSTRN. STANDARD

westernpower

DRAWN: JRR | DATE: 20-03-2014 | DRG. No. H21

ORIGINATED: | SCALE: NTS

CHECKED: REE

APPROVED: GRANT STACY | REV. F | SHT. 1/1

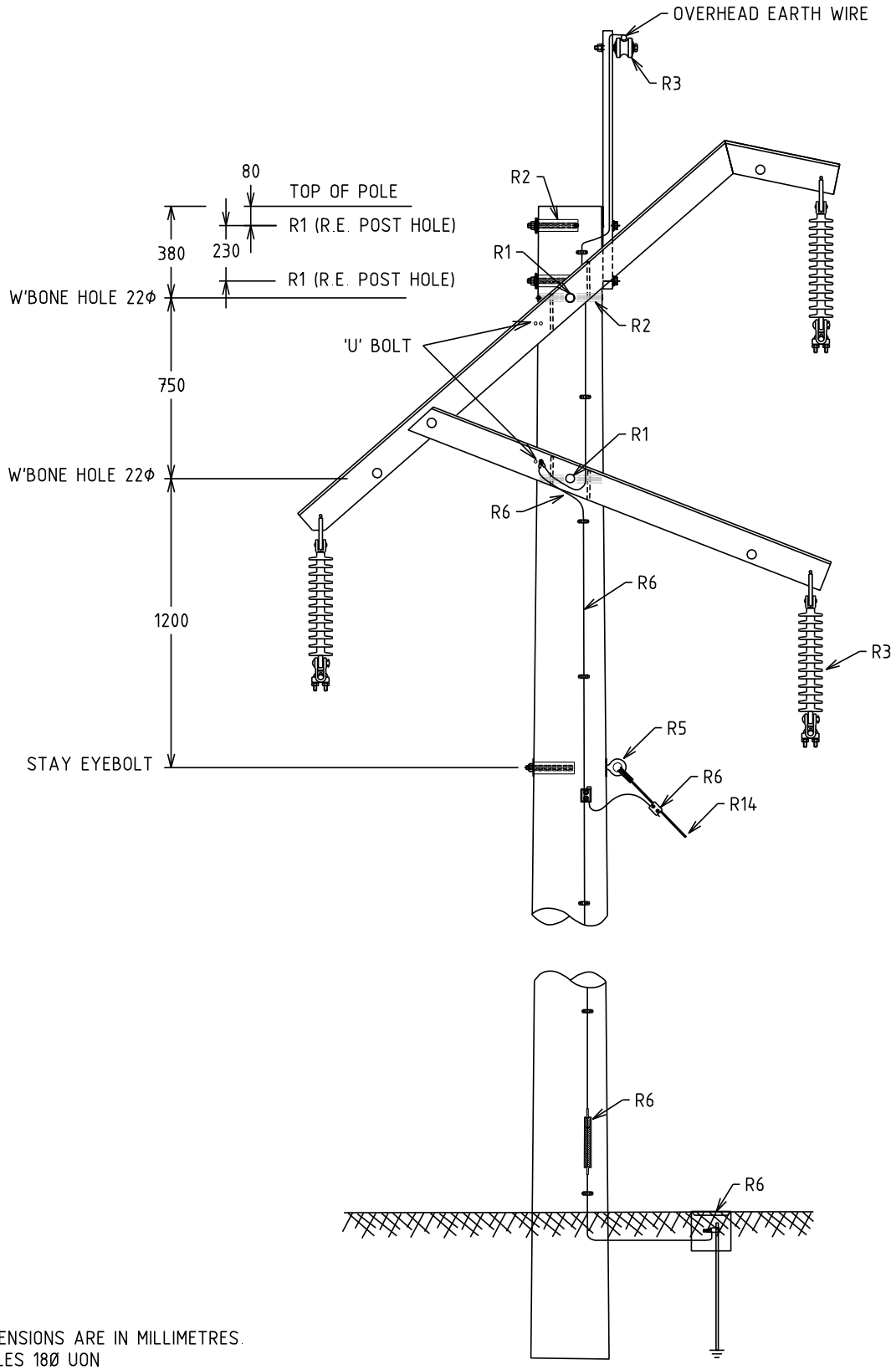

NOTES:
1. ALL DIMENSIONS ARE IN MILLIMETRES.
2. ALL HOLES 18Ø UON
3. MAXIMUM DISTANCE BETWEEN DOWNEARTHS = 600m.

12.5m POLE MIN

REV.	DATE	DESCRIPTION	ORGD.	CHKD.	APRD.
D	02.11.26	EARTH CONNECTION METHOD MODIFIED	CO	NMc	MM
C	11.01.18	EARTHING SYSTEM MODIFIED	REE	JC	GS
B	29.07.13	ORIGINAL ISSUE			

STRUCTURE

TITLE

INTERMEDIATE WISHBONE
WITH OVERHEAD EARTHWIRE

DISTRIBUTION CONSTRN. STANDARD

westernpower

DRAWN: JRR | DATE: 20-03-2014 | DRG. No. H22

ORIGINATED: | SCALE: NTS

CHECKED: REE

APPROVED: GRANT STACY | REV. D | SHT. 1/1

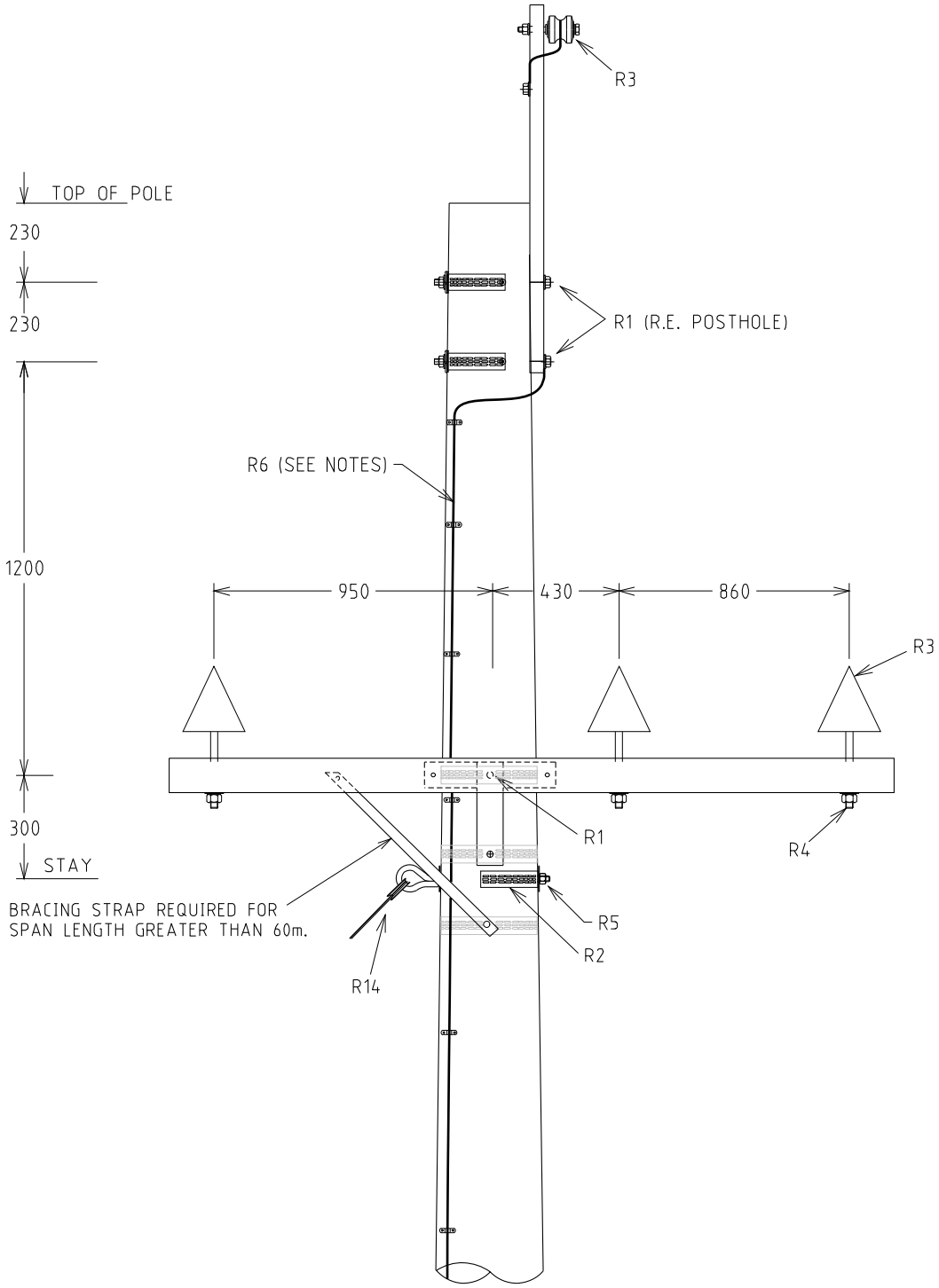

NOTES:
1. ALL HOLES 18Ø U.O.N.
2. MAXIMUM DISTANCE BETWEEN DOWNEARTH = 600m
3. DOWN EARTH APPLIED ON OPPOSITE SIDE OF POLE TO CENTRE PHASE INSULATOR, AS SHOWN.
4. CROSS-ARM BRACING STRAP MAY BE REQUIRED, SEE H3.

REV	DATE	DESCRIPTION	ORGD.	CHKD.	APRD.
C	03.02.17	CHANGED DISTANCE BETWEEN POLE TOP & BOLT HOLE	CO	REE	GS
B	13.08.14	FORMAT CHANGED AND BRACING STRAP ADDED	JC	REE	GS
A	03.07.13	ORIGINAL ISSUE			

STRUCTURE

TITLE
INTERMEDIATE FLAT CONSTRUCTION WITH OVERHEAD EARTHWIRE

DISTRIBUTION CONSTRN. STANDARD

westernpower

DRAWN: JRR | DATE: 20-03-2014 | DRG. No. H23
ORIGINATED: | SCALE: NTS
CHECKED: REE
APPROVED: GRANT STACY | REV. C | SHT.

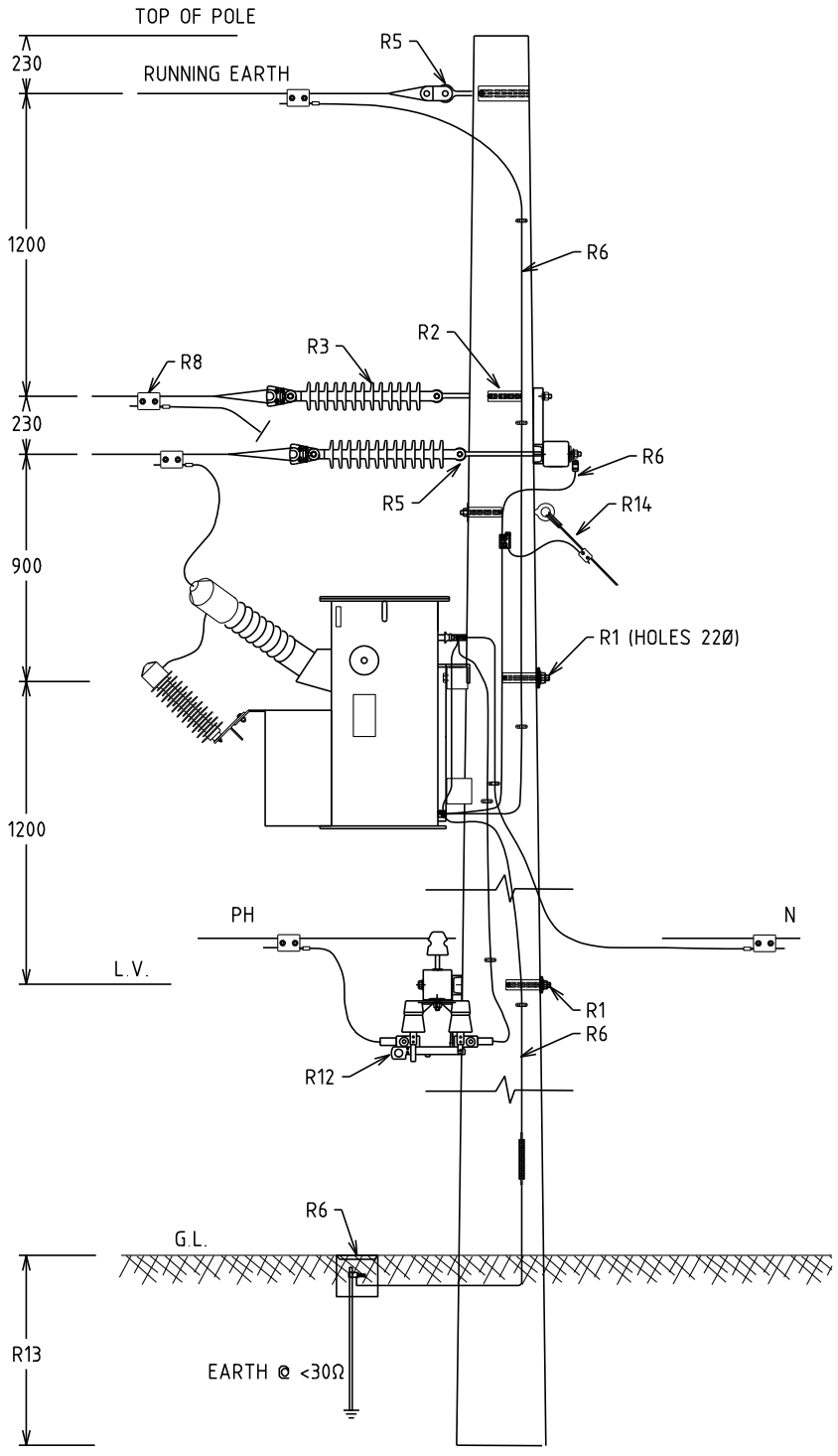

12.5m POLE

NOTES:
1. ALL DIMENSIONS ARE IN MILLIMETRES.
2. ALL HOLES 18Φ U.O.N.

REV.	DATE	DESCRIPTION	ORGD.	CHKD.	APRD.
E	02.11.26	R6 LABEL ADDED	CO	NMc	MM
D	08.12.25	EARTHING TO TOP POLE ADDED. R5 UPDATED	CO	KT	MM
C	16.11.18	EARTHING SYSTEM MODIFIED & TX MODEL CHANGED	NMc	NN	GS
B	20.03.14	FORMAT CHANGED			GS
A	13.07.00	ORIGINAL ISSUE			

STRUCTURE

TITLE: TERMINATION TRANSFORMER WITH OVERHEAD EARTHWIRE

DISTRIBUTION CONSTRN. STANDARD

westernpower

DRAWN: JRR | DATE: 20-03-2014 | DRG. No. H24

ORIGINATED: | SCALE: NTS

CHECKED: REE

APPROVED: GRANT STACY | REV. E | SHT. 1/1

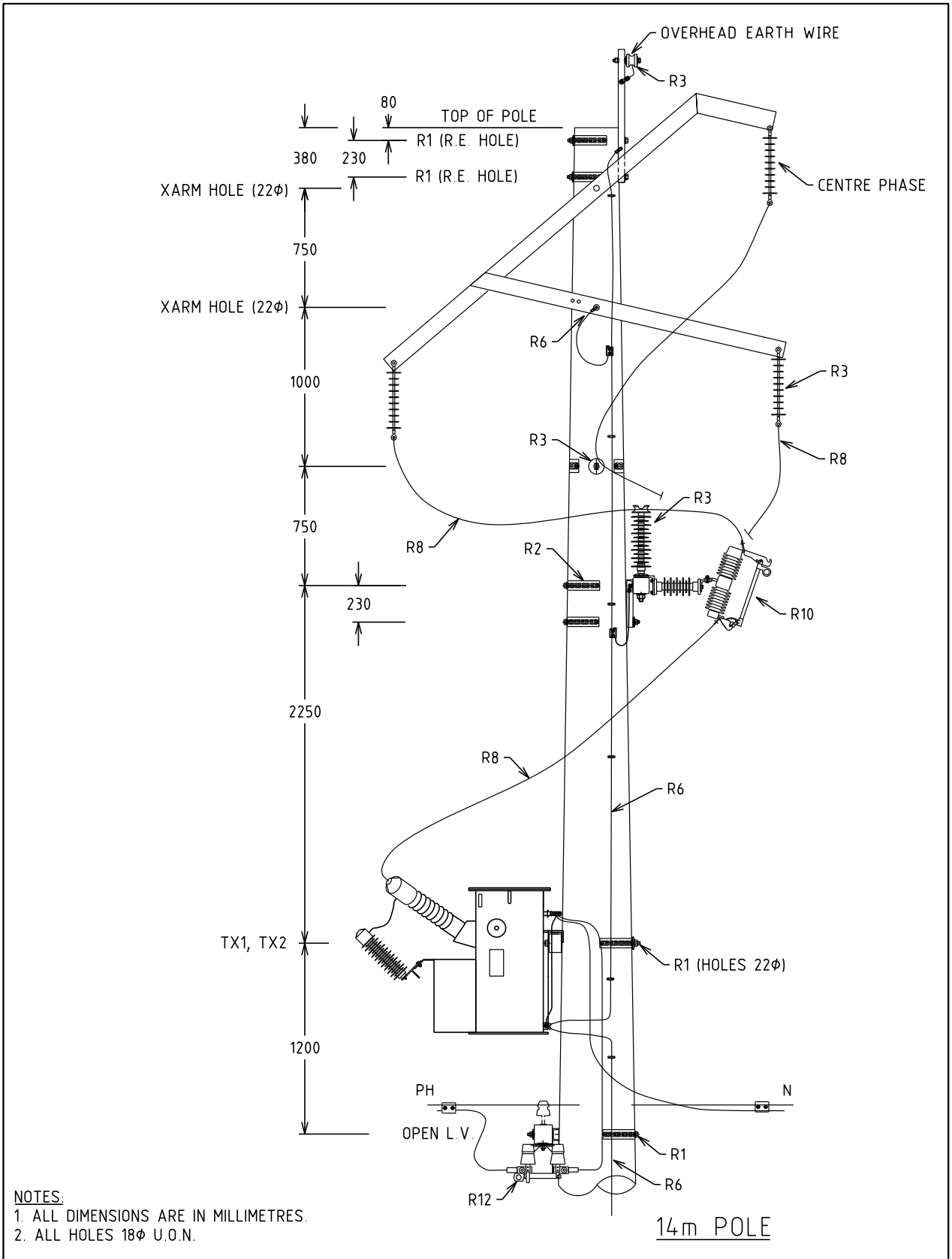

NOTES:
1. ALL DIMENSIONS ARE IN MILLIMETRES.
2. ALL HOLES 18Φ U.O.N.

REV.	DATE	DESCRIPTION	ORGD.	CHKD.	APRD.
C	08.12.25	POLE TOP EARTHING ADDED. R3 UPDATED	CO	KT	MM
B	16.11.18	EARTHING SYSTEM MODIFIED & TX MODEL CHANGED	NMc	NN	GS
A	20.11.13	ORIGINAL ISSUE			

STRUCTURE

TITLE

INTERMEDIATE TRANSFORMER
WISHBONE CONSTRUCTION

DISTRIBUTION CONSTRN. STANDARD

westernpower

DRAWN: JRR | DATE: 20-03-2014 | DRG. No. H25

ORIGINATED: | SCALE: NTS

CHECKED: REE

APPROVED: GRANT STACY | REV. C | SHT. 1/1

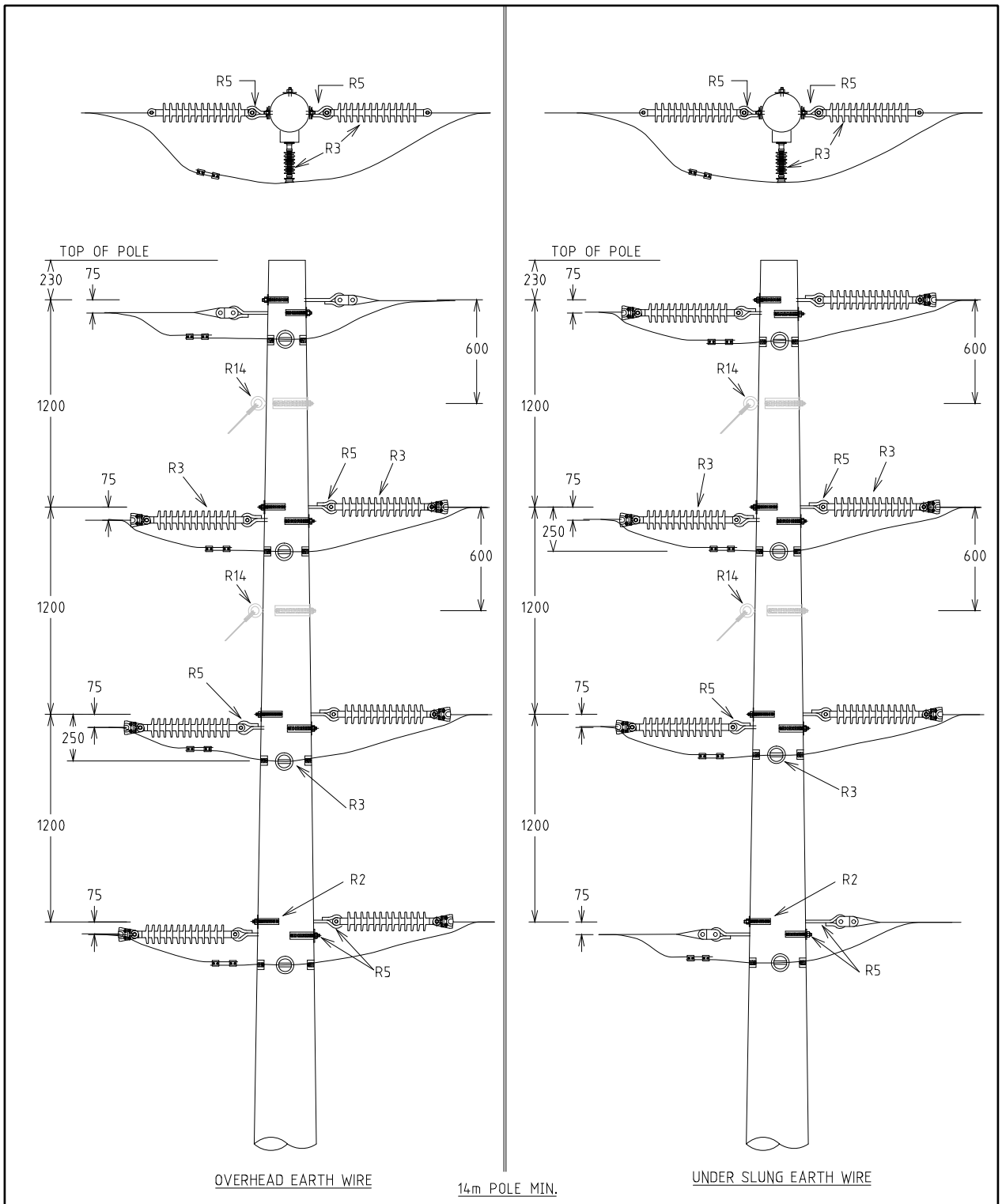

NOTES:-
1. ALL HOLES 18Φ U.O.N.
2. MAXIMUM DISTANCE BETWEEN DOWNEARTHS = 600m.
3. INSTALL STAYS IF REQUIRED.

REV	DATE	DESCRIPTION	ORGD.	CHKD.	APRD.
C	03.02.17	DRAWING NUMBER CHANGED TO H26-1	CO	RE	GS
B	15.01.16	EARTHING & STAY SYSTEM MODIFIED AND TITLE REVISED	FK	ME	GS
A	13.07.00	ORIGINAL ISSUE			

STRUCTURE

TITLE

VERTICAL STRAIN

DISTRIBUTION CONSTRN. STANDARD

westernpower

DRAWN: JRR | DATE: 20-03-2014 | DRG. No. H26-1

ORIGINATED: | SCALE: NTS

CHECKED: FK

APPROVED: GRANT STACY | REV. C | SHT.

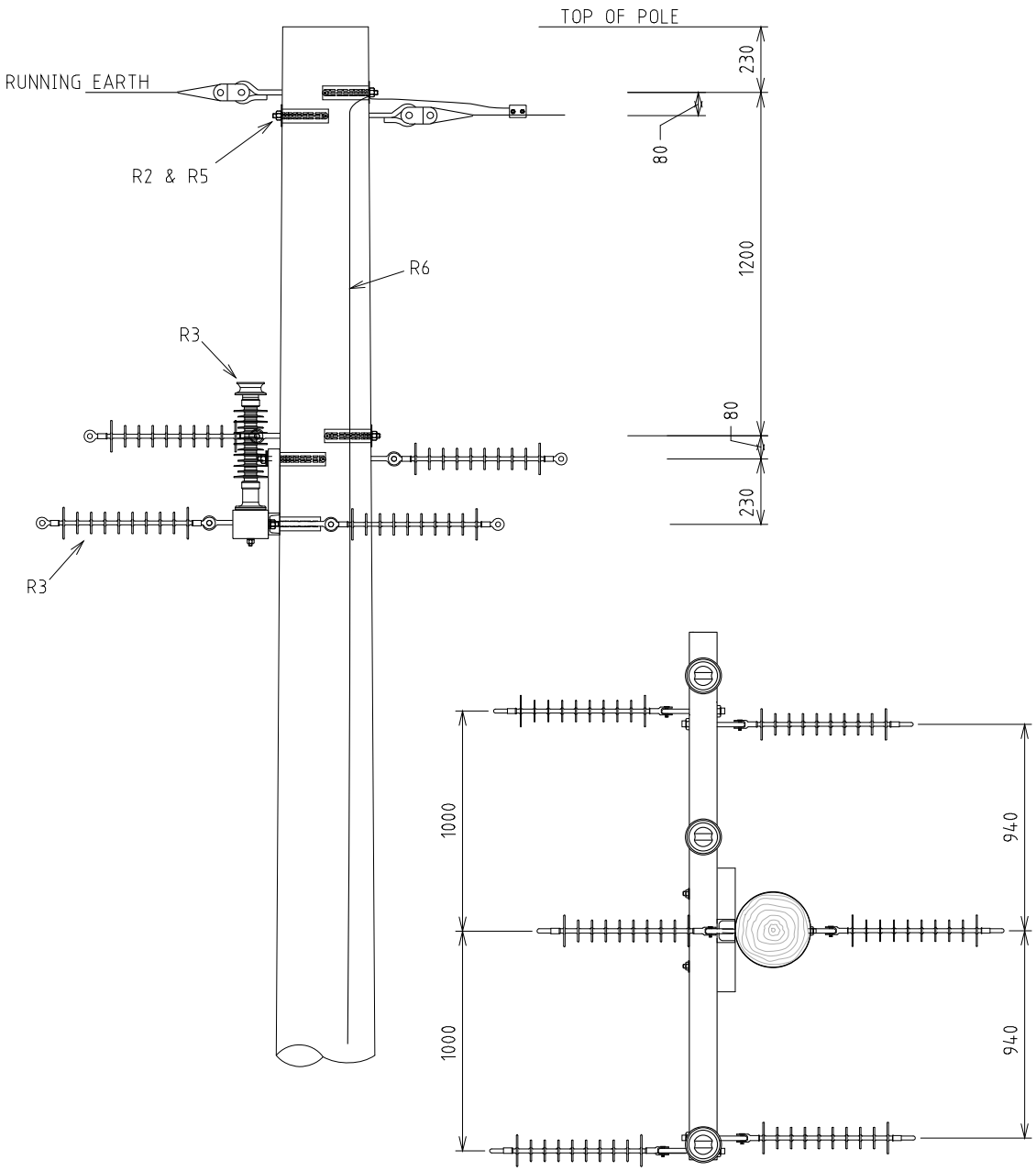

NOTES:
1. ALL DIMENSIONS ARE IN MILLIMTRES.
2. ALL HOLES 18Ø U.O.N.
3. MAXIMUM DISTANCE BETWEEN DOWNEARTH = 600m

REV	DATE	DESCRIPTION	ORGD.	CHKD.	APRD.
A	03.02.17	ORIGINAL ISSUE	CO	REE	GS

STRUCTURE

TITLE

INLINE STRAIN
WITH OVER HEAD EARTH WIRE

DISTRIBUTION CONSTRN. STANDARD

westernpower

DRAWN: JRR | DATE: 01-12-2016 | DRG. No. H26-2

ORIGINATED: CO | SCALE: NTS

CHECKED: REE

APPROVED: GRANT STACY | REV. A | SHT.

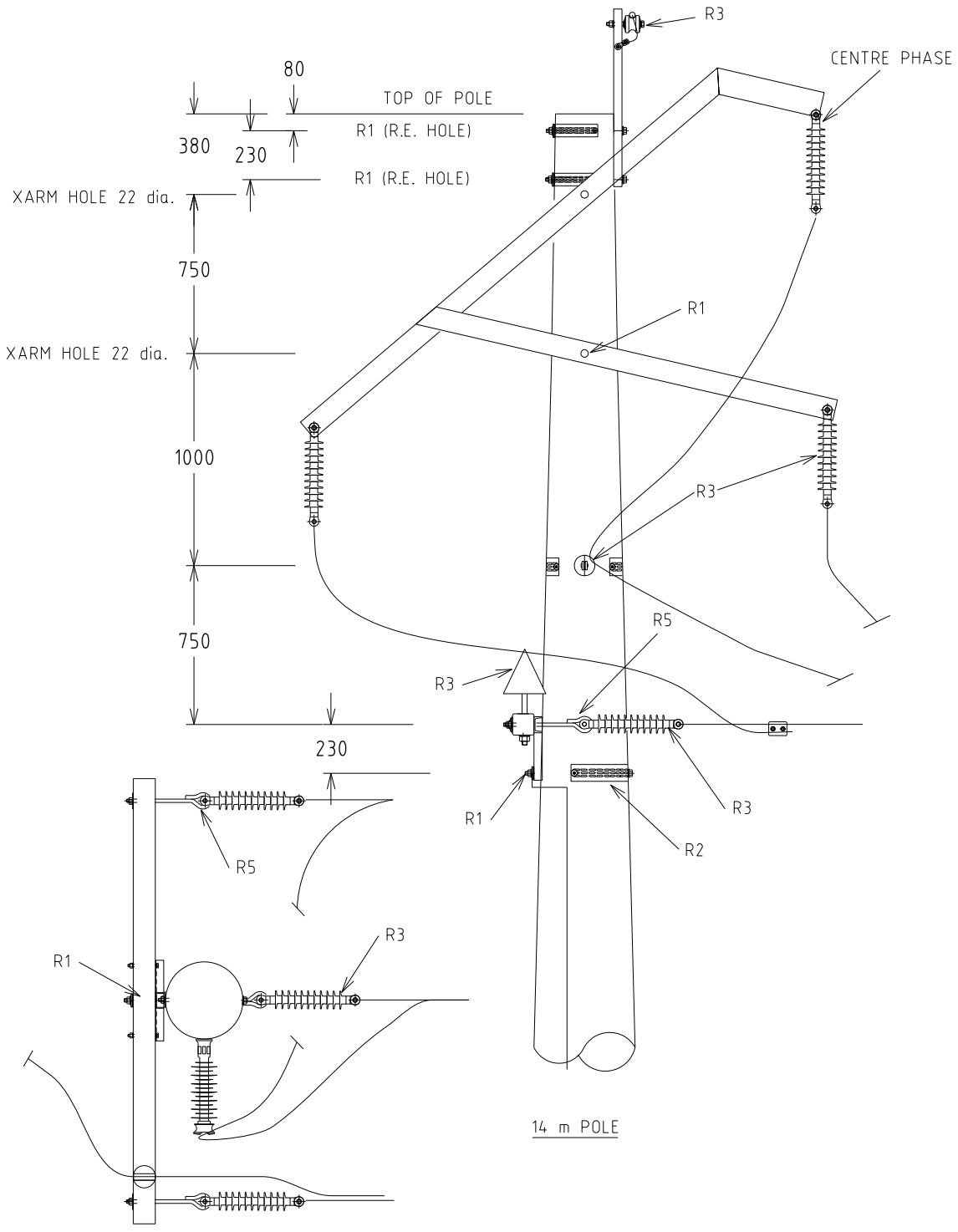

NOTE:-
1. ALL HOLES 18DIA U.O.N.
2. DOWNEARTH - R6
3. MAXIMUM DISTANCE BETWEEN DOWNEARTH = 600m

R. No.	DATE	DESCRIPTION	ORGD.	CHED.	APRD.
B	30.04.15	FORMAT AND TITLE CHANGED	REE	REE	GS
A	13.07.00	ORIGINAL ISSUE			

STRUCTURE

TITLE

WISHBONE CONSTRUCTION WITH TEE-OFF

DISTRIBUTION CONSTRN. STANDARD

westernpower

DRAWN: JRR | DATE: 10-03-2014 | DRG. No. H27

ORIGINATED: | SCALE: NTS

CHECKED: REE

APPROVED: GRANT STACY | REV. B | SHT.

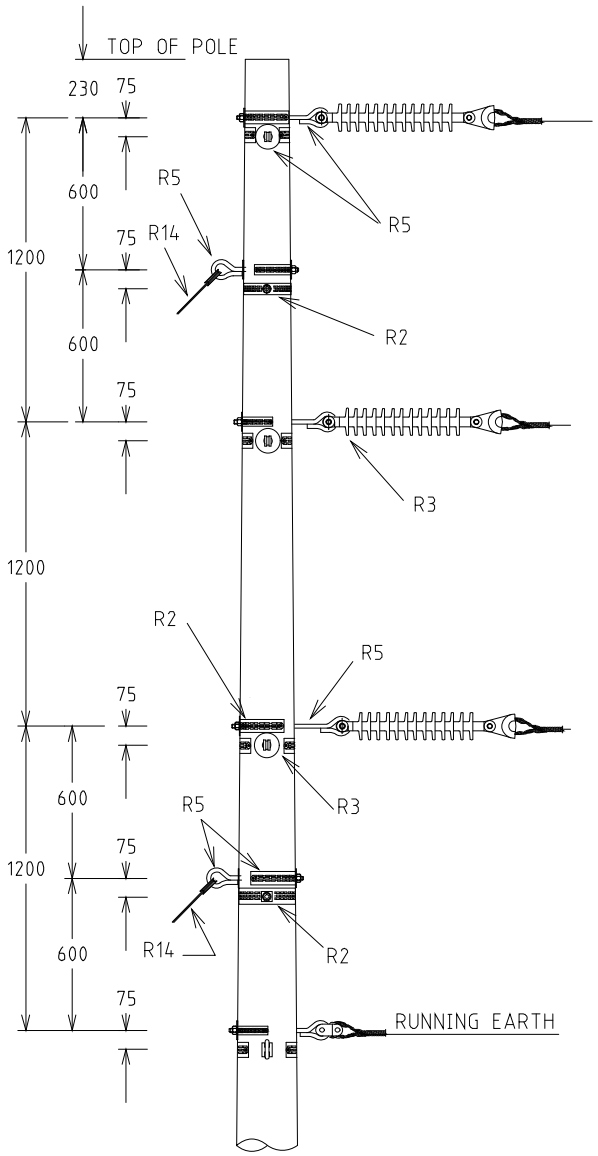

UNDER SLUNG EARTH WIRE

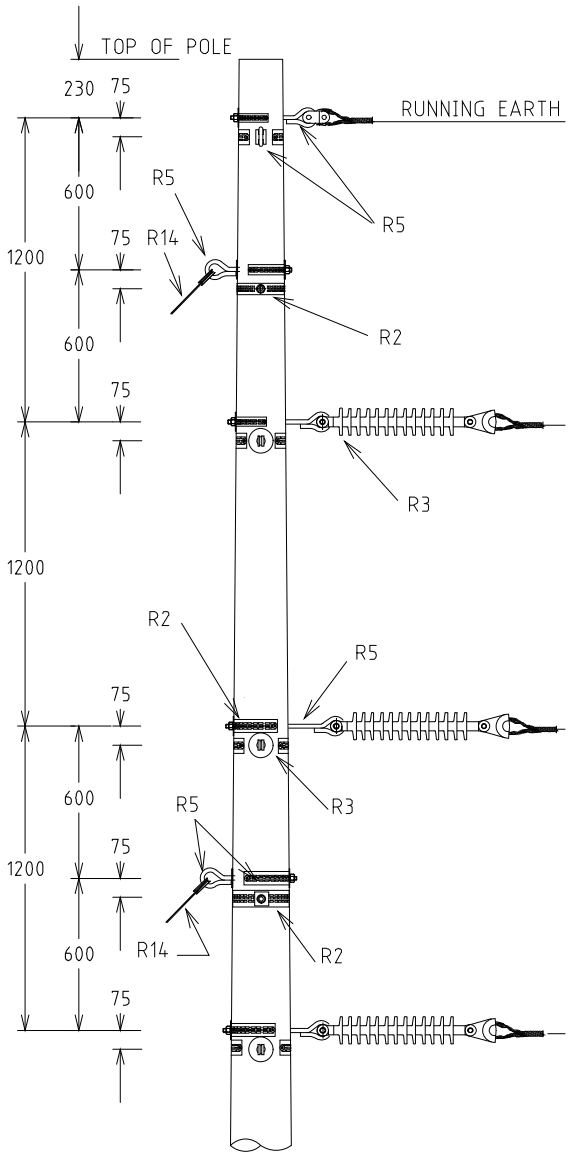

OVERHEAD EARTH WIRE

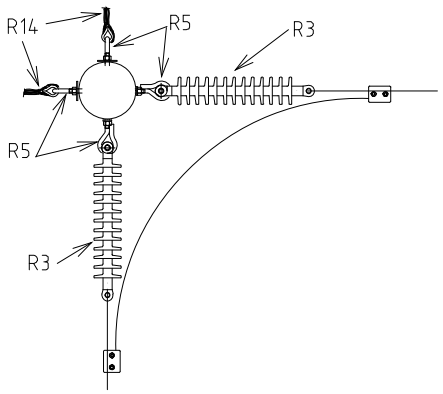

NOTE:-
1. ALL DIMENSIONS ARE IN MILLIMETRES.
2. ALL HOLES 18DIA U.O.N.
3. MAXIMUM DISTANCE BETWEEN DOWNEARTH = 600m

REV	DATE	DESCRIPTION	ORGD.	CHKD.	APRD.
B	30.01.17	TITLE CHANGED & UNDER SLUNG EARTH WIRE ADDED	CO	REE	GS
A	13.07.00	ORIGINAL ISSUE			

STRUCTURE

TITLE

VERTICAL STRAIN ANGLE

DISTRIBUTION CONSTRN. STANDARD

westernpower

DRAWN: JRR | DATE: 20-03-2014 | DRG. No. H28

ORIGINATED: | SCALE: NTS

CHECKED: REE

APPROVED: GRANT STACY | REV. B | SHT.

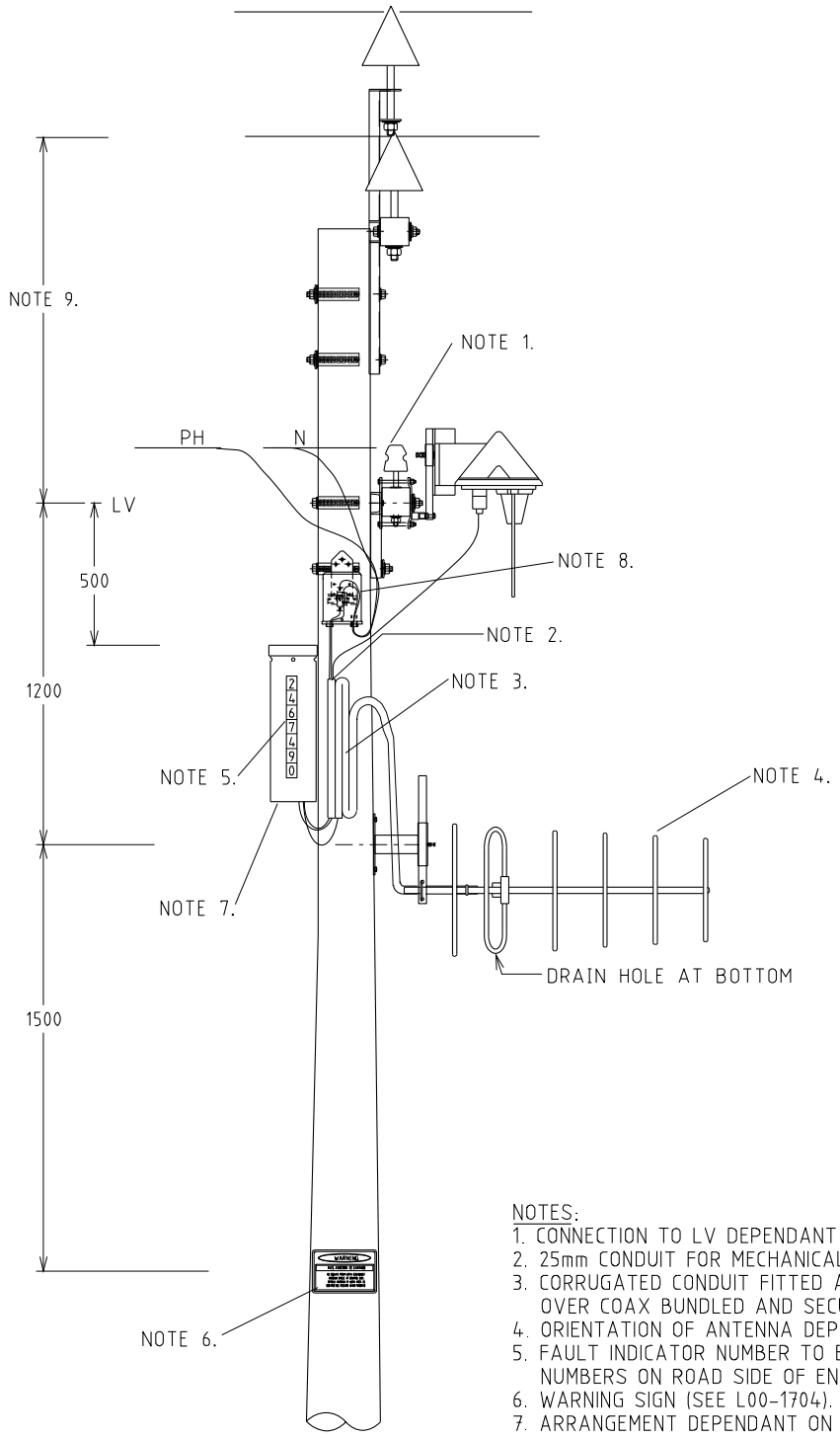

NOTES:
1. CONNECTION TO LV DEPENDANT ON SUPPLY ARRANGEMENT.
2. 25mm CONDUIT FOR MECHANICAL PROTECTION OF CABLES.
3. CORRUGATED CONDUIT FITTED AS MECHANICAL PROTECTION OVER COAX BUNDLED AND SECURED AGAINST POLE.
4. ORIENTATION OF ANTENNA DEPENDANT ON SELECTED RADIO BASE.
5. FAULT INDICATOR NUMBER TO BE DISPLAYED WITH REFLECTIVE NUMBERS ON ROAD SIDE OF ENCLOSURE.
6. WARNING SIGN (SEE L00-1704).
7. ARRANGEMENT DEPENDANT ON ANTENNA, USUALLY INSTALLED ON SOUTH SIDE OF POLE TO MINIMISE UV EXPOSURE.
8. SINGLE PHASE CONNECTION BOX - ENCLOSURE TO BE ISOLATED PRIOR TO MAINTENANCE.
9. FOR HV ONLY STRUCTURE,SEPARATION TO LOWEST CONDUCTOR SHOULD BE 2-3 METRES. FOR HV/LV, LOCATE AT NULL POINT.

REV	DATE	DESCRIPTION	ORGD.	CHKD.	APRD.
C	07.09.03	ORIGINAL ISSUE			

STRUCTURE

TITLE

FAULT INDICATOR
LV AERIAL SUPPLY ARRANGEMENT

DISTRIBUTION CONSTRN. STANDARD

westernpower

DRAWN: JRR	DATE: 20-03-2014	DRG. No. H29-1
ORIGINATED:	SCALE: NTS	
CHECKED: REE		
APPROVED: GRANT STACY		REV. C SHT.

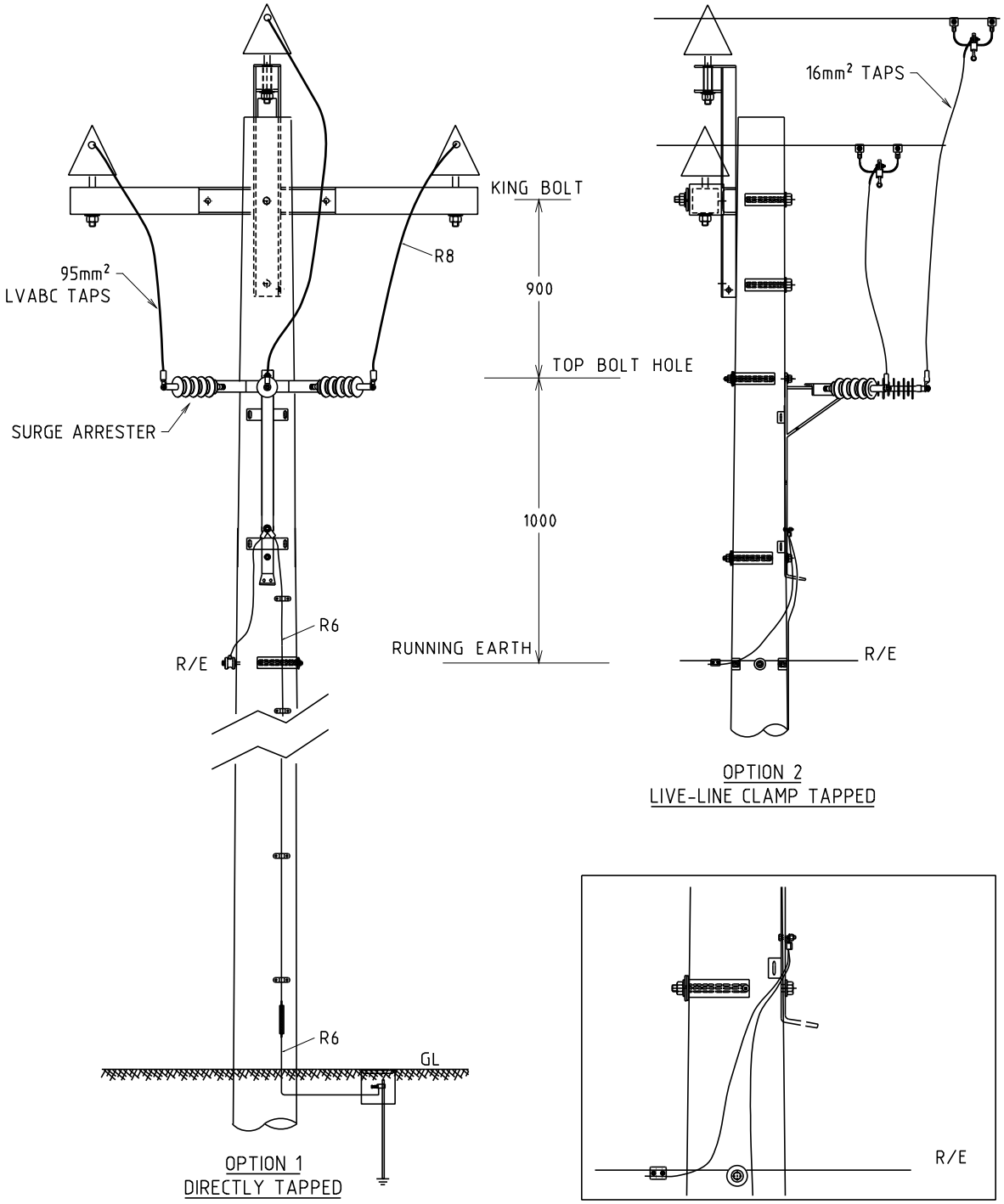

OPTION 1
DIRECTLY TAPPED

OPTION 2
LIVE-LINE CLAMP TAPPED

NOTES:-
1. ALL DIMENSIONS ARE IN MILLIMETRES.
2. SELECT SURGE ARRESTER ACCORDING TO NETWORK VOLTAGE AND TO BE SPARK PRODUCTION CLASS-A.
3. RUNNING EARTH AND DOWN EARTH CONNECTED TO SURGE ARRESTER BRACKET

REV	DATE	DESCRIPTION	ORGD.	CHKD.	APRD
C	24.02.21	OPTIONS TITLE ADDED	BP	NMc	GS
B	07.10.11	ORIGINAL ISSUE			

STRUCTURE

TITLE
SURGE ARRESTER
STANDARD LINE INSTALLATION

DISTRIBUTION CONSTRN. STANDARD

westernpower

DRAWN: JRR | DATE: 20-03-2014 | DRG. No. H30
ORIGINATED: | SCALE: NTS
CHECKED: REE
APPROVED: GRANT STACY | REV. C | SHT.

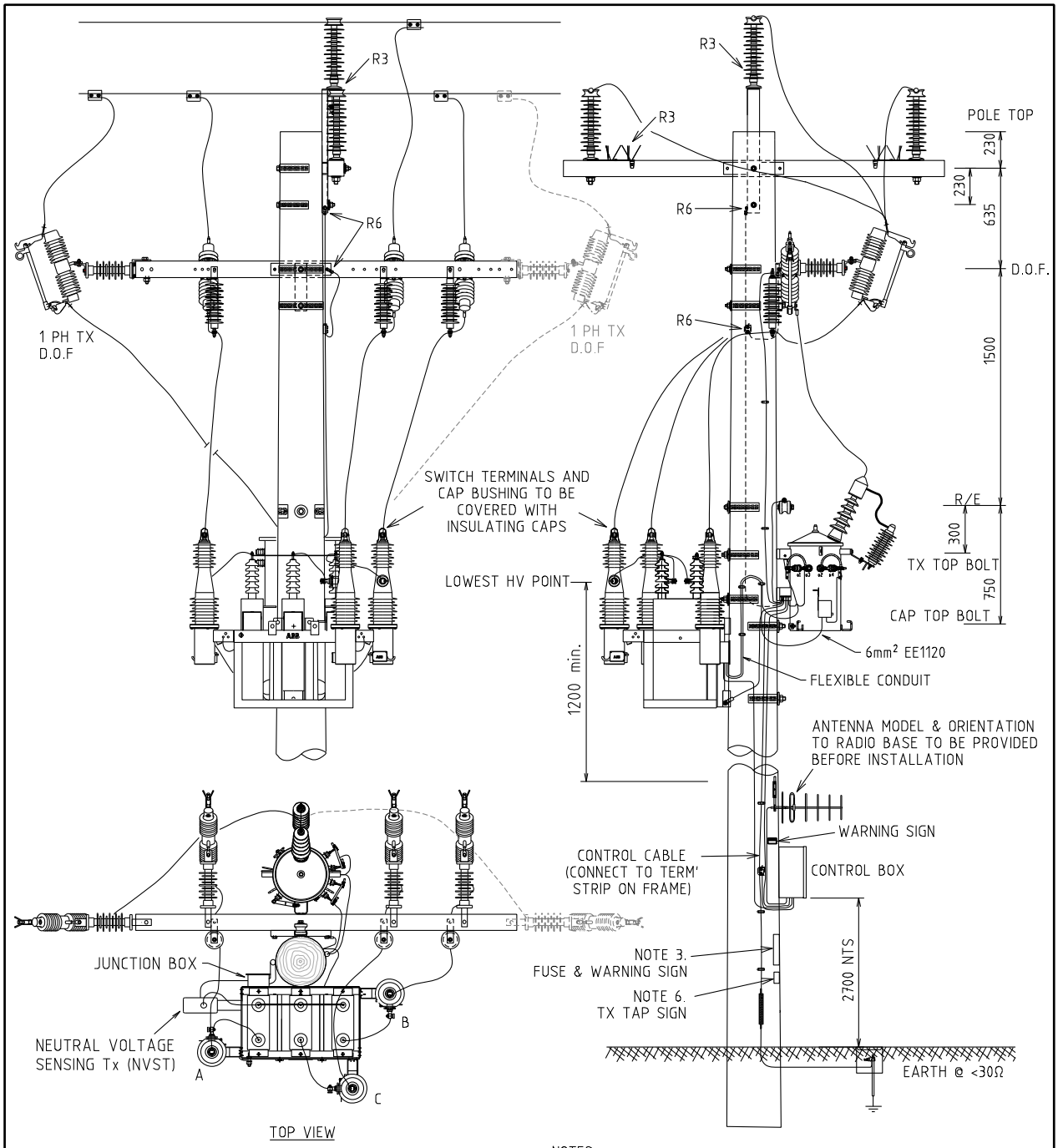

NOTES:

1. ALL HOLES 18Φ UNLESS NOTED OTHERWISE.
2. FRAME & CONTROL BOX MUST BE GROUNDED WITH 70mm² STRANDED COPPER CABLE.
3. WARNING SIGN FITTED 1.8m-2m ON CAPACITOR FUSE SIDE
4. LV ABC CABLE TO BE USED FOR PHASE CONNECTIONS
5. 1000kVA BANKS REQUIRE 40A DOFs
   500kVA BANKS REQUIRE 25A DOFs
6. FIT SIGN "TRANSFORMER MUST BE SET TO TAP 1.
7. ADJUST TRANSFORMER TAP POSITION & TX DATA PLATE.
8. LV FUSE ON TX - 32A.
9. TRAIN JUMPERS TO MAINTAIN MINIMUM CLEARANCE
10. ADDITIONAL DOF REQUIRED FOR DOUBLE BUSHING TRANSFORMERS.

REV.	DATE	DESCRIPTION	ORGD.	CHKD.	APRD.
G	08.12.25	POLE TOP EARTHING ADDED. R3 UPDATED	CO	KT	MM
F	15.11.17	TRANSFORMER TYPE CHANGED	NMc	CO	GS
E	12.06.17	DRAWINGS H31-1 AND 31-2 CONSOLIDATED	NMc	REE	GS
D	09.10.15	NOTES REVISED	ME	REE	CO

STRUCTURE

TITLE

22kV CAPACITOR BANK WITH 10 kVA TRANSFORMER (SINGLE/DOUBLE BUSHING)

DISTRIBUTION CONSTRN. STANDARD

westernpower

DRAWN: JRR	DATE: 21-03-2014	DRG. No. H31
ORIGINATED:	SCALE: NTS	
CHECKED: REE		
APPROVED: GRANT STACY	REV G	SHT. 1/1

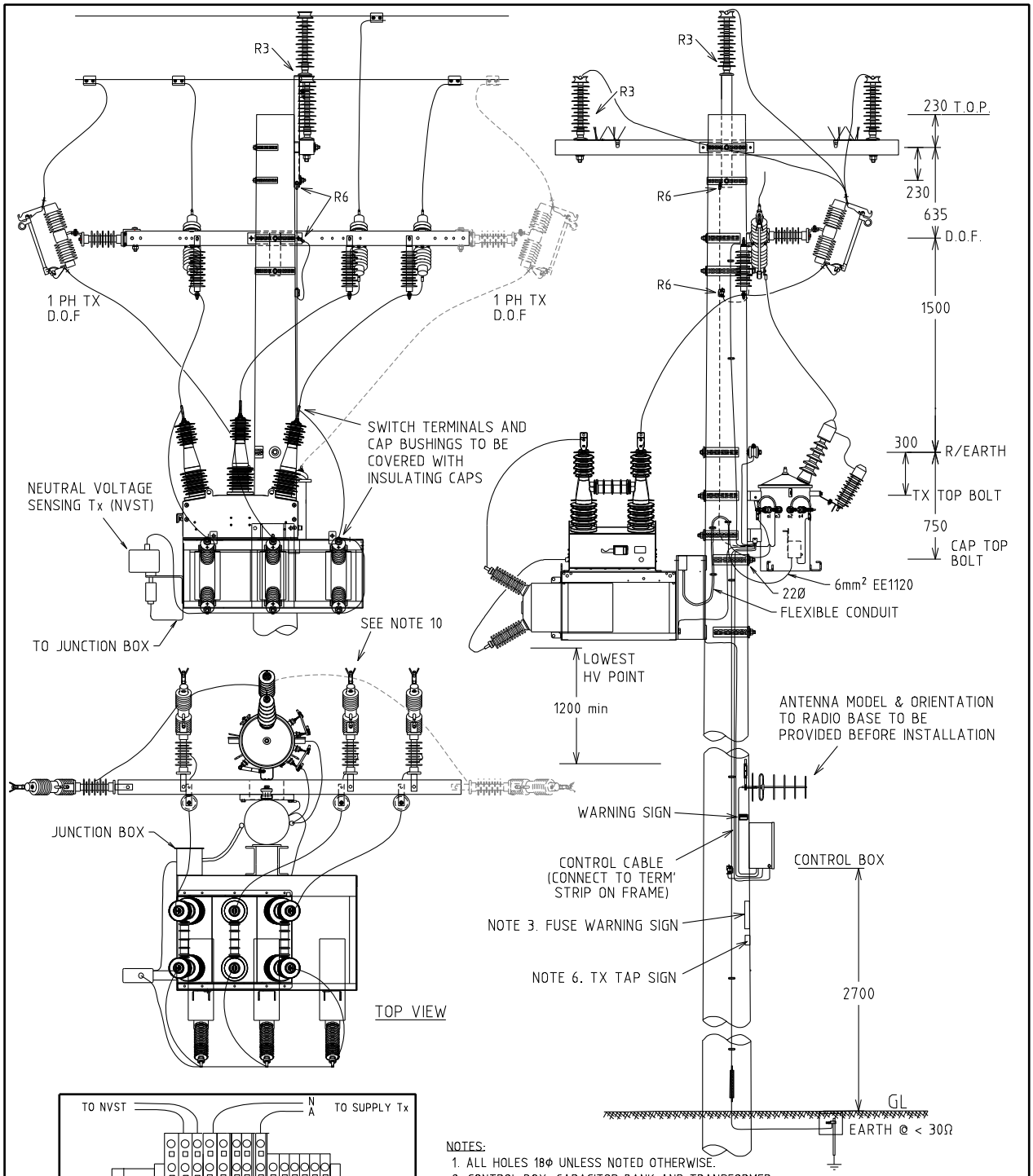

NOTES:
1. ALL HOLES 18Φ UNLESS NOTED OTHERWISE.
2. CONTROL BOX, CAPACITOR BANK AND TRANSFORMER MUST BE GROUNDED WITH 70mm² STRANDED COPPER CABLE.
3. WARNING SIGN FITTED 1.8m-2m ON CAPACITOR FUSE SIDE
4. LV ABC CABLE TO BE USED FOR PHASE CONNECTIONS
5. 1000kVA BANKS REQUIRE 25A DOFs,
   500kVAr BANKS REQUIRE 16A DOFs.
6. FIT SIGN "TRANSFORMER MUST BE SET TO TAP 1.
7. ADJUST TRANSFORMER TAP POSITION & TX DATA PLATE.
8. LV FUSE ON TX - 32A.
9. TRAIN JUMPERS TO MAINTAIN MINIMUM CLEARANCE.
10. ADDITIONAL DOF REQUIRED FOR DOUBLE BUSHING TRANSFORMERS.

REV.	DATE	DESCRIPTION	ORGD.	CHKD.	APRD.
I	08.12.25	POLE TOP EARTHING ADDED. R3 UPDATED	CO	KT	MM
H	15.11.17	TRANSFORMER TYPE CHANGED	NMc	CO	GS
G	06.06.17	JB CONNECTION DETAILS ADDED, TITLE & DWG # CHANGED	NMc	REE	GS
F	16.05.17	CAPACITOR BANK CONNECTIONS MODIFIED	NMc	REE	GS

STRUCTURE

TITLE
33kV CAP BANK WITH SWITCH AND 10kVA OR 25kVA TRANSFORMER (SINGLE/TWO BUSHING) CONNECTION DETAILS

DISTRIBUTION CONSTRN. STANDARD

westernpower

DRAWN: JRR | DATE: 21-03-2014 | DRG. No. H32
ORIGINATED: | SCALE: NTS
CHECKED: REE
APPROVED: GRANT STACY | REV I | SHT. 1/1

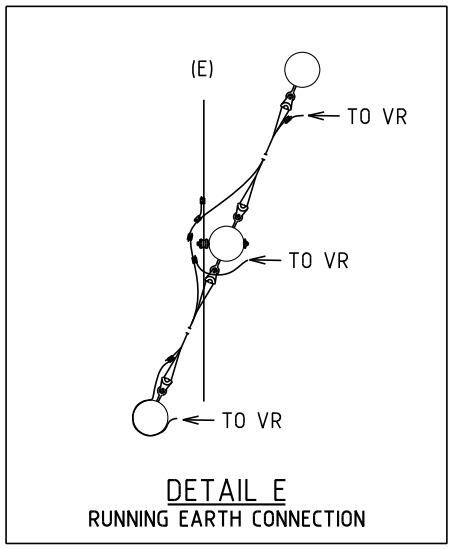

DETAIL E
RUNNING EARTH CONNECTION

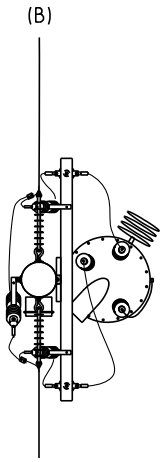

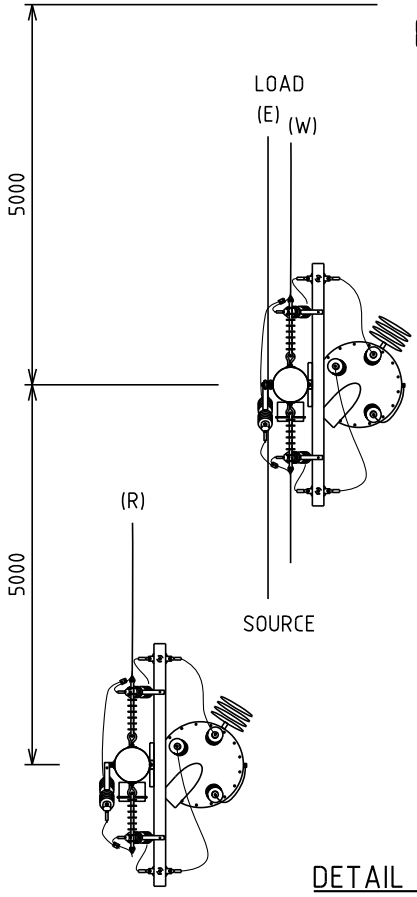

DETAIL E
PLAN VIEW

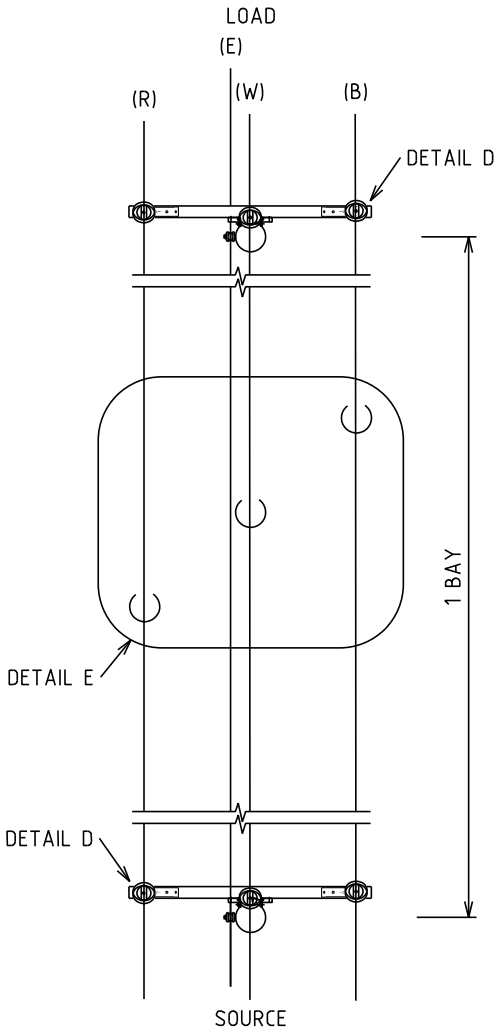

IN-LINE LAYOUT

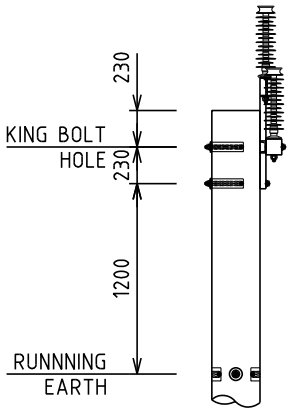

DETAIL D
SIDE VIEW POLE TOP

REV.	DATE	DESCRIPTION	ORGD.	CHKD.	APRD.
D	25.05.25	POLE TOP EARTHING ADDED. RE UPDATED	ML	NMc	CO
C	24.03.11	ORIGINAL ISSUE			

STRUCTURE

TITLE: IN-LINE LAYOUT
TYPE GE VR-1 50A-100A
DETAILS

DISTRIBUTION CONSTRN. STANDARD

westernpower

DRAWN: JRR	DATE: 20-03-2014	DRG. No. H33-1
ORIGINATED:	SCALE: NTS	
CHECKED: REE		
APPROVED: GRANT STACY		REV. D / SHT. 1/1

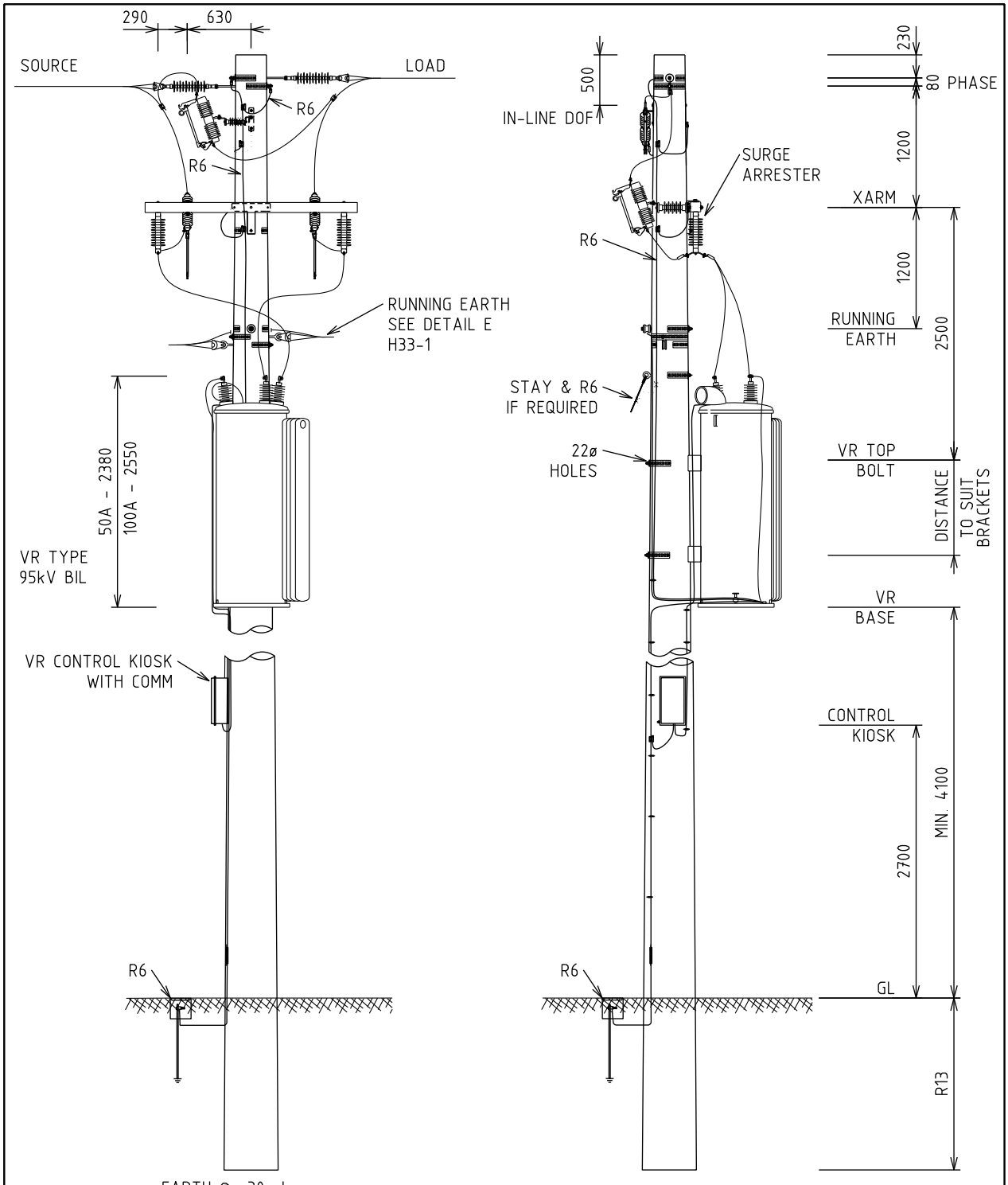

NOTES:
1. ALL DIMENSIONS ARE IN MILLIMETRES.
2. ALL HOLES 18Ø U.O.N.
3. MIN. 6kN POLE
4. LOCAL/SOIL CONDITIONS MAY REQUIRE STAYS
5. EARTH CONNECTION REQUIRED BETWEEN VR POLES.

REV.	DATE	DESCRIPTION	ORGD.	CHKD.	APRD.
D	25.05.26	POLE TOP EARTHING ADDED. RE UPDATE	ML	NMc	CO
C	15.03.12	ORIGINAL ISSUE			

STRUCTURE

TITLE: IN-LINE DETAIL
TYPE GE VR-1 50A-100A
CONSTRUCTION DETAIL

DISTRIBUTION CONSTRN. STANDARD

westernpower

DRAWN: JRR | DATE: 21-03-2014 | DRG. No. H33-2
ORIGINATED: | SCALE: NTS
CHECKED: REE
APPROVED: GRANT STACY | REV. D | SHT. 1/1

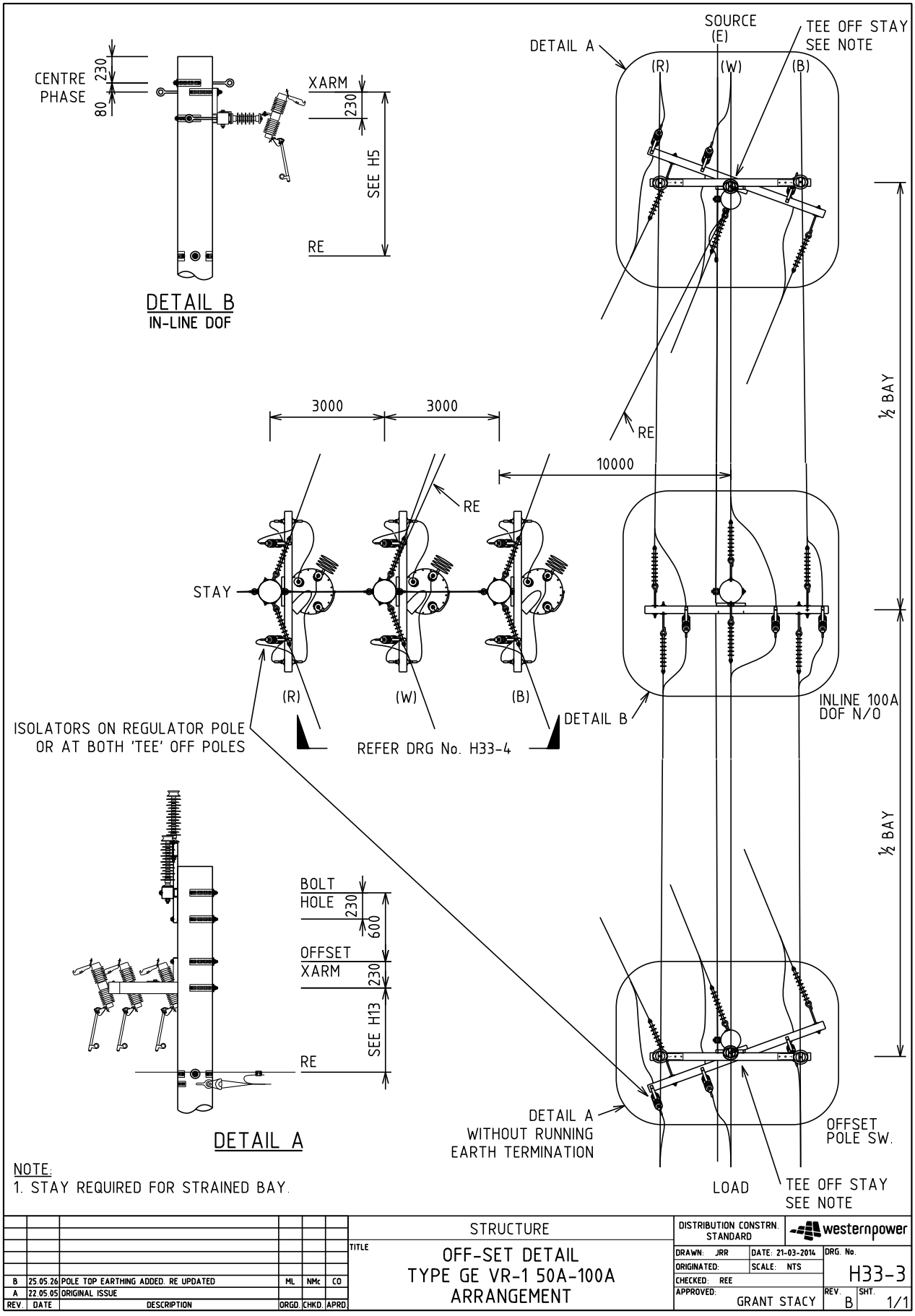

NOTE:
1. STAY REQUIRED FOR STRAINED BAY.

REV.	DATE	DESCRIPTION	ORGD.	CHKD.	APRD.
B	25.05.26	POLE TOP EARTHING ADDED. RE UPDATED	ML	NMc	CO
A	22.05.05	ORIGINAL ISSUE			

STRUCTURE

TITLE: OFF-SET DETAIL TYPE GE VR-1 50A-100A ARRANGEMENT

DISTRIBUTION CONSTRN. STANDARD

westernpower

DRAWN: JRR | DATE: 21-03-2014 | DRG. No. H33-3

ORIGINATED: | SCALE: NTS

CHECKED: REE

APPROVED: GRANT STACY | REV. B | SHT. 1/1

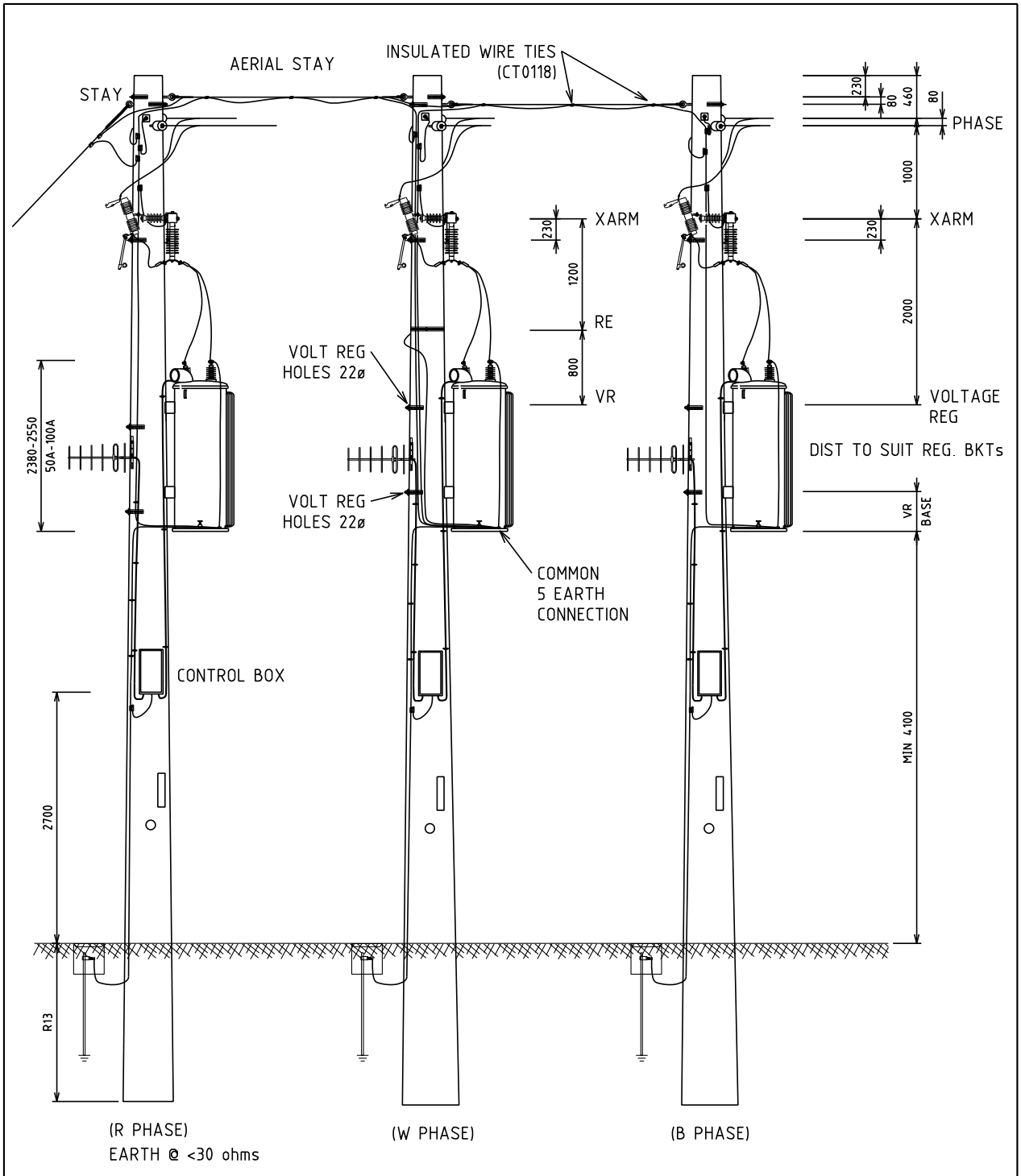

NOTES:
1. ALL DIMENSIONS ARE IN MILLIMETRES.
2. ALL HOLES 18Φ U.O.N.
3. MIN. 6kN POLE.
4. LOCAL/SOIL CONDITIONS MAY REQUIRE STAYS.
5. EARTH CONNECTION REQUIRED BETWEEN VR POLES.
6. ISOLATORS ON REGULATOR POLE OR AT BOTH "TEE" OFF POLES

REV.	DATE	DESCRIPTION	ORGD.	CHKD.	APRD.
B	25.05.26	POLE TOP EARTHING ADDED. W PHASE ADDED	ML	NMc	CO
A	22.05.05	ORIGINAL ISSUE			

STRUCTURE

TITLE: OFF-SET DETAIL
TYPE GE VR-1 50A-100A
CONSTRUCTION DETAIL

DISTRIBUTION CONSTRN. STANDARD

westernpower

DRAWN: JRR | DATE: 21-03-2014 | DRG. No. H33-4
ORIGINATED: | SCALE: NTS
CHECKED: REE
APPROVED: GRANT STACY | REV. B | SHT. 1/1

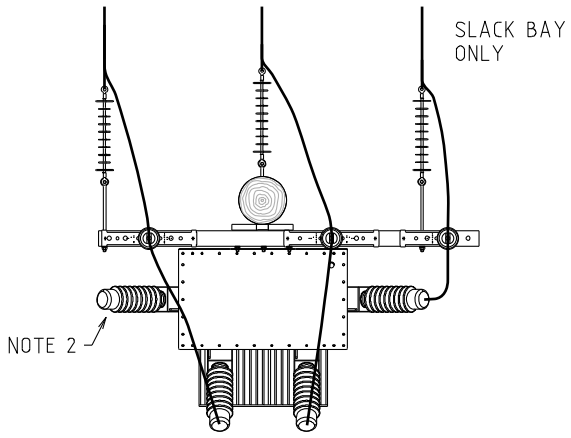

PLAN

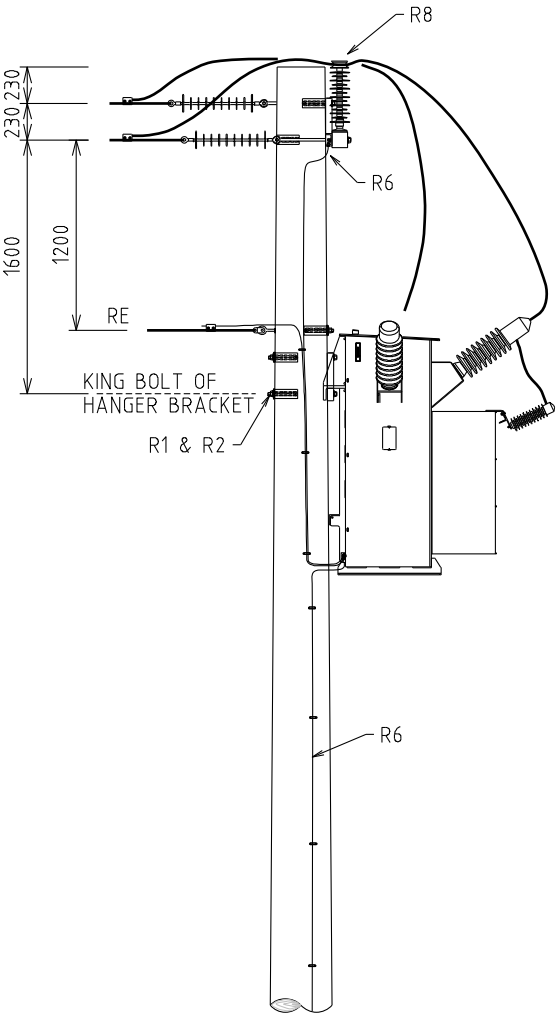

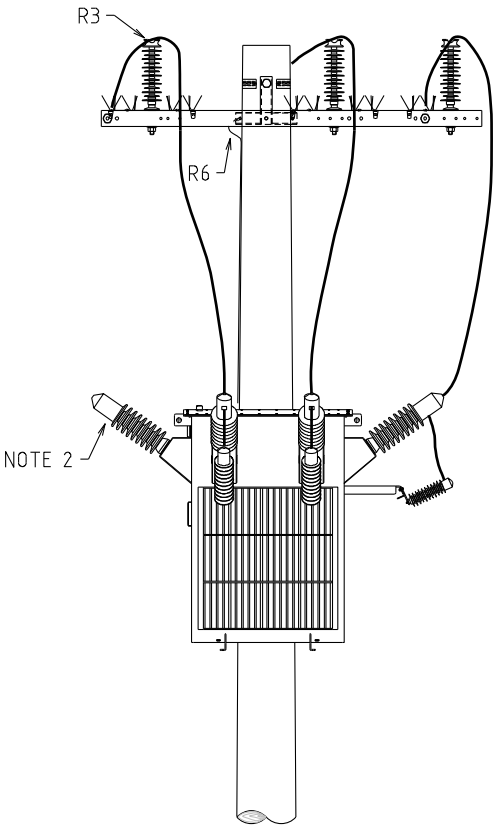

FRONT ELEVATION

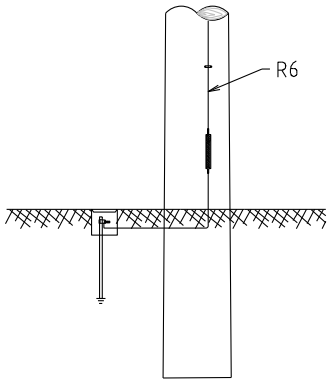

SIDE ELEVATION

NOTES:
1. ALL DIMENSIONS ARE IN MILLIMETRES.
2. NEUTRAL TERMINAL NOT CONNECTED.

REV.	DATE	DESCRIPTION	ORGD.	CHKD.	APRD.
B	08.12.25	POLE TOP EARTHING ADDED. R3 UPDATED	CO	KT	MM
A	08.11.19	ORIGINAL ISSUE	NMc	CO	GS

STRUCTURE

TITLE

SHUNT REACTOR

DISTRIBUTION CONSTRN. STANDARD

westernpower

DRAWN: JRR | DATE: 05-11-2019 | DRG. No. H34

ORIGINATED: NMc | SCALE: NTS

CHECKED: CO

APPROVED: GRANT STACY | REV B | SHT. 1/1

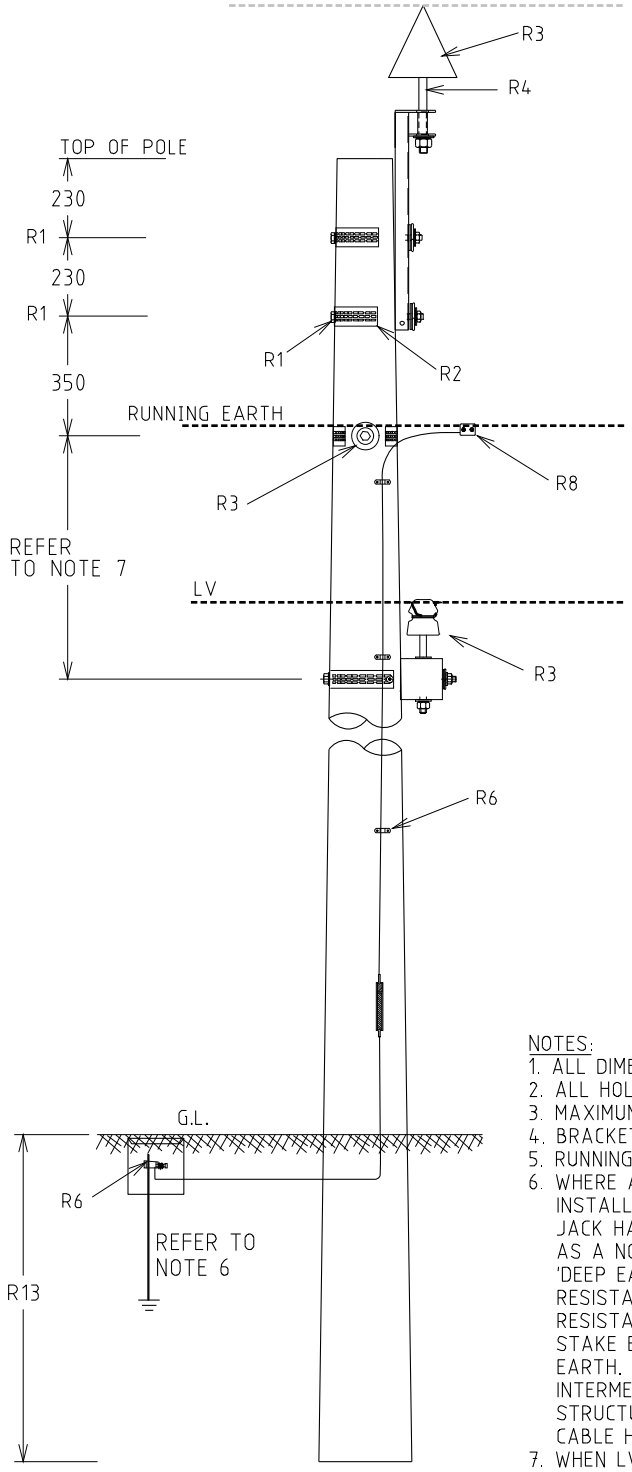

NOTES:
1. ALL DIMENSIONS ARE IN MILLILMETRES.
2. ALL HOLES 18Φ U.O.N.
3. MAXIMUM DISTANCE BETWEEN DOWNEARTH = 600m
4. BRACKET ON SIDE, OPPOSITE SIDE OF POLE TO ANGLE OF DEV.
5. RUNNING EARTH (R/E) DETAILS SEE R3/1.
6. WHERE A VALUE OF <30Ω CANNOT BE ACHIEVED (AFTER INSTALLING THE MAXIMUM NUMBER OF RODS POSSIBLE USING A JACK HAMMER), THE VALUE SHOULD BE RECORDED AND FLAGGED AS A NON-CONFORMANCE ON THE CHECK SHEET. A DRILLED 'DEEP EARTH' SHOULD NOT BE INSTALLED TO OBTAIN AN EARTH RESISTANCE READING LESS <30Ω. PLEASE NOTE THAT THE EARTH RESISTANCE MEASUREMENT SHOULD BE TAKEN OFF THE EARTH STAKE BEFORE IT IS CONNECTED TO THE UNDERSLUNG RUNNING EARTH. PLEASE NOTE THAT THIS RELAXATION APPLIES TO INTERMEDIATE POLES. EARTH RESISTANCE VALUES AT KEY STRUCTURE POLES SUCH AS TRANSFORMERS, POLE TOP SWITCHES, CABLE HEADS ETC. ARE STILL REQUIRED TO BE EARTHED TO <30Ω.
7. WHEN LV CONDUCTOR IS;
   (a) LV BARE CONDUCTOR –
       650 IF R/E IS SCAC OR SCGZ
       1100 IF R/E IS AAAC.
   (b) LV ABC
       450 FOR ALL TYPES OF R/E CONDUCTOR

REV	DATE	DESCRIPTION	ORGD.	CHKD.	APRD.
F	14.11.18	NOTE 6&7 ADDED	REE	JC	GS
E	15.01.16	LV ADDED	FK	ME	GS
D	11.12.13	ORIGINAL ISSUE			

STRUCTURE

TITLE

INTERMEDIATE

DISTRIBUTION CONSTRN. STANDARD

westernpower

DRAWN: JRR | DATE: 10-03-2014 | DRG. No. H40-1

ORIGINATED: | SCALE: NTS

CHECKED: REE

APPROVED: GRANT STACY | REV. F | SHT.

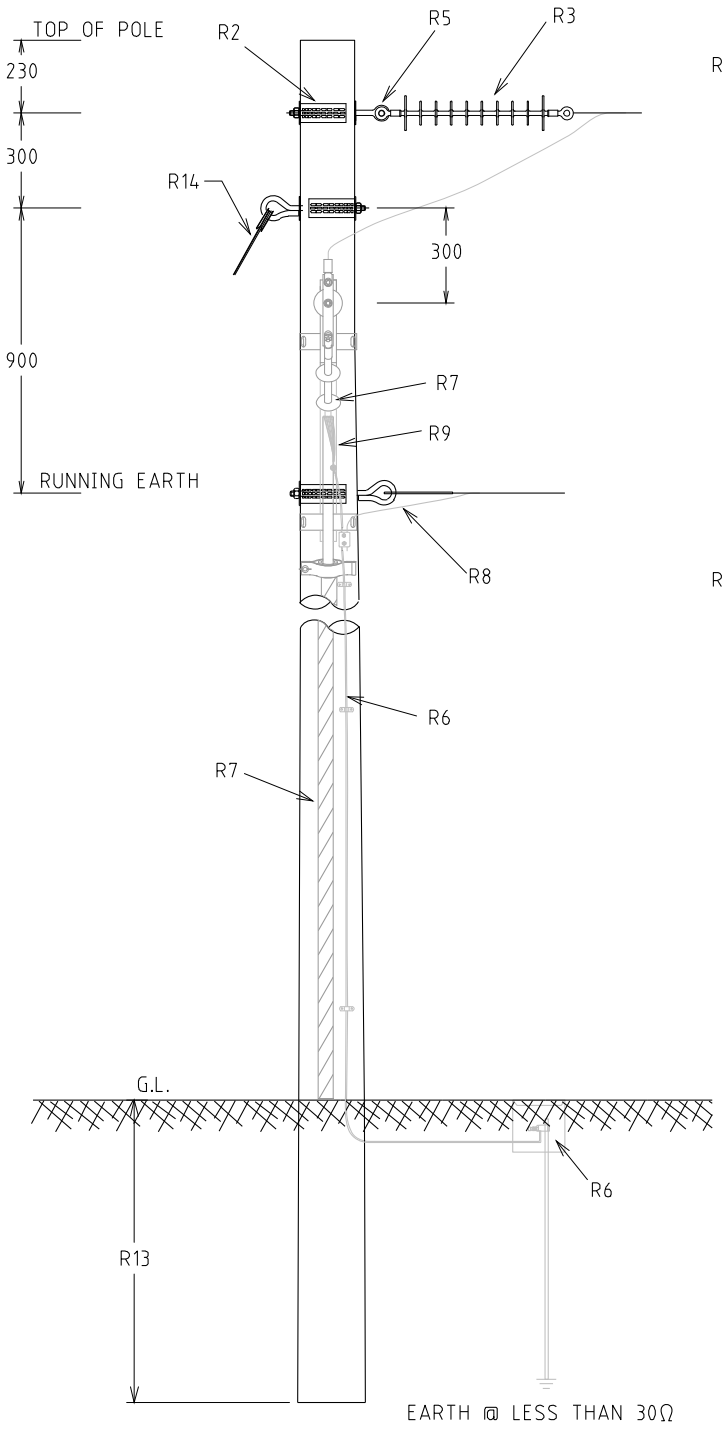

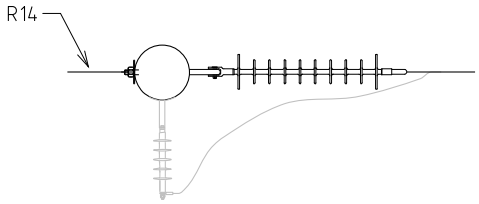

PLAN
TERMINATION

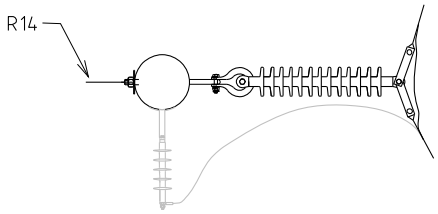

PLAN
RUNNING DISC ANGLE

NOTE
1. ALL HOLES 18DIA U.O.N.
2. MAXIMUM DISTANCE BETWEEN DOWNEARTH = 600m.

REV	DATE	DESCRIPTION	ORGD.	CHKD.	APRD.
B	09.05.16	CABLE TERMINATION ADDED AND TITLE CHANGED	FK	CO	GS
A	10.10.13	ORIGINAL ISSUE			

STRUCTURE

TITLE
RUNNING DISC OR TERMINATION
WITH/WITHOUT CABLE TERMINATION

DISTRIBUTION CONSTRN. STANDARD

westernpower

DRAWN: JRR | DATE: 21-03-2014 | DRG. No. H41-1
ORIGINATED: | SCALE: NTS
CHECKED: REE
APPROVED: GRANT STACY | REV. B | SHT.

TAP OVER OR TAP AROUND

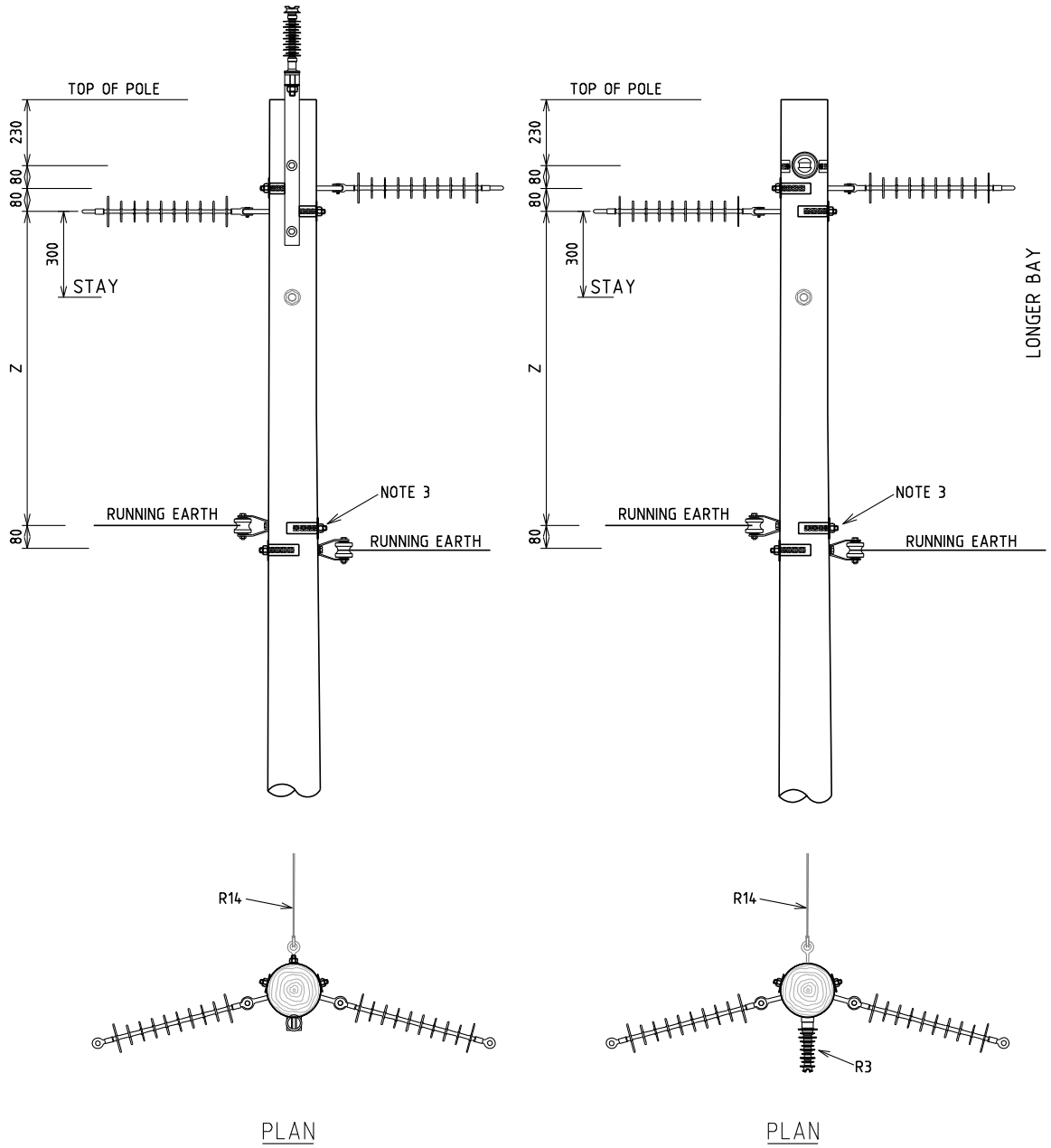

PLAN PLAN

SPAN	Z
UP TO 250m	1200
400m	2000

NOTES:-
1. ALL DIMENSIONS ARE IN MILLIMETRES.
2. ALL HOLES 18Ø U.O.N.
3. ALTERNATIVE INTERMEDIATE RUNNING EARTH CAN BE USED IF DEVIATION IS <2° AND ATTACHED AT THE HIGHER POSITION.

REV	DATE	DESCRIPTION	ORGD.	CHKD.	APRD.
D	13.02.19	NOTES REVISED AND DIMENSION CHANGED	CO	GS	FK
C	04.04.18	MORE DETAILS ADDED	CO	NMc	GS
B	24.02.17	TITLE & NOTES CHANGED AND PLAN & TABLE ADDED	DVT	CO	GS
A	23.06.13	ORIGINAL ISSUE			

STRUCTURE

TITLE: SINGLE PHASE STRAIN ANGLE

DISTRIBUTION CONSTRN. STANDARD

westernpower

DRAWN: JRR DATE: 21-03-2014

ORIGINATED: SCALE: NTS

CHECKED: REE

APPROVED: GRANT STACY

DRG. No. H41-2

REV. D SHT.

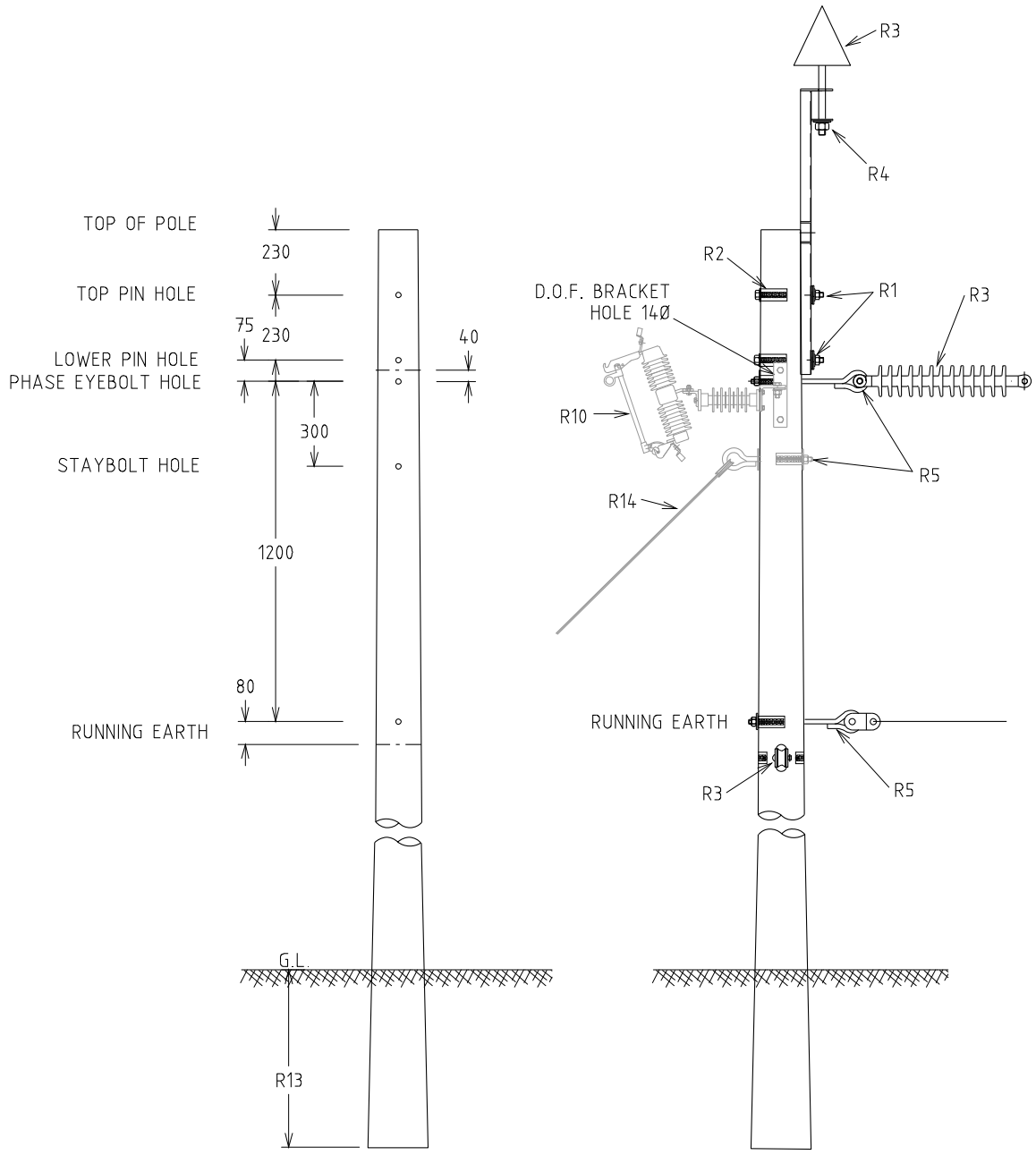

NOTES:-
1. ALL DIMENSIONS ARE IN MILLIMETRES.
2. ALL HOLES 18Ø U.N.O.
3. MAXIMUM DISTANCE BETWEEN DOWNEARTH = 600m.
4. USE RUNNING EARTH INTERMEDIATE ANGLE, IF DEVIATION IS >2°.
5. USE CROSSARM STRAP (CB0485) IF DEVIATION IS >10°.
6. FOR TWO PHASE CONSTRUCTION, POSITION CONDUCTORS ON EITHER END OF CROSSARM.

REV	DATE	DESCRIPTION	ORGD.	CHKD.	APRD
C	15.01.16	NOTES REVISED AND DWG # REVISED TO H42-1	FK	ME	GS
B	12.12.11	ORIGINAL ISSUE			

STRUCTURE

SINGLE PHASE TEE-OFF TO STRAIN WITH OR WITHOUT DROPOUT FUSE

DISTRIBUTION CONSTRN. STANDARD

westernpower

DRAWN: JRR | DATE: 24-03-2014 | DRG. No. H42-1

ORIGINATED: | SCALE: NTS

CHECKED: REE

APPROVED: GRANT STACY | REV. C | SHT.

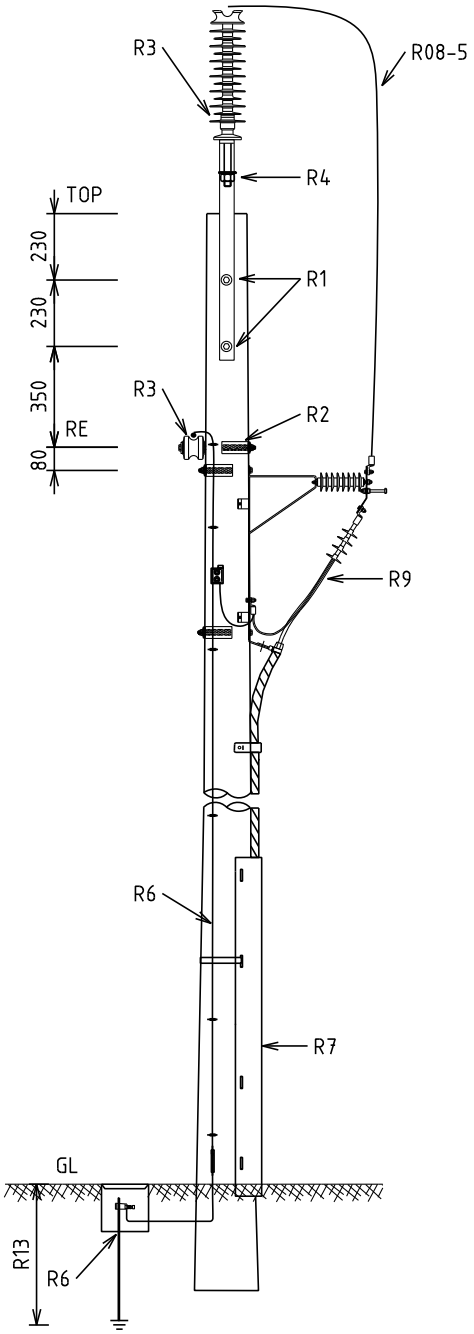

FRONT VIEW
WITHOUT DOF

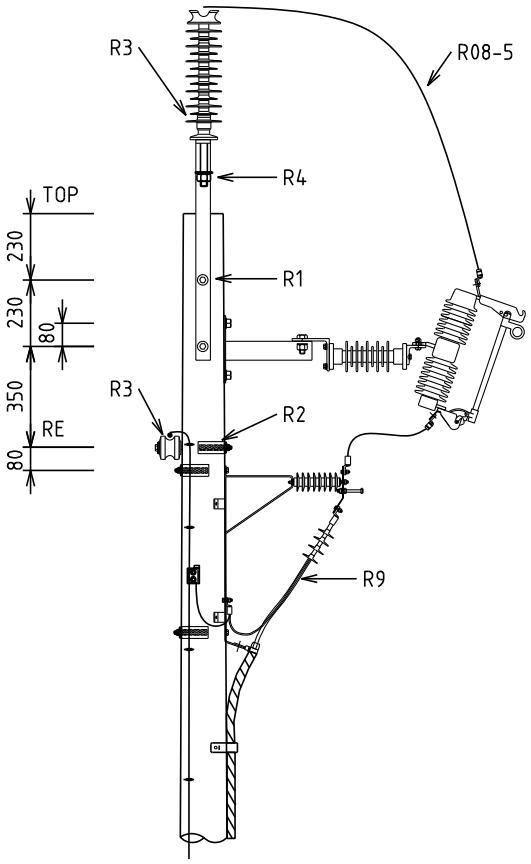

FRONT VIEW WITH DOF
DETAIL IF DOF REQUIRED

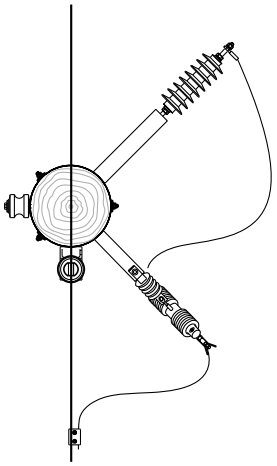

PLAN VIEW WITH DOF
DETAIL IF DOF REQUIRED

NOTES:
1. ALL DIMENSIONS ARE IN MILLIMETRES.
2. ALL HOLES 18Ø U.O.N.
3. MAXIMUM DISTANCE BETWEEN DOWNEARTHS = 600m

REV.	DATE	DESCRIPTION	ORGD.	CHKD.	APRD.
B	02.11.26	ADDED DOF VARIANT	CO	NMc	MM
A	15.01.16	ORIGINAL ISSUE	FK	ME	GS

STRUCTURE

TITLE

INTERMEDIATE WITH
CABLE TERMINATION

DISTRIBUTION CONSTRN. STANDARD

westernpower

DRAWN: JRR DATE: 03-12-2015

ORIGINATED: FK SCALE: NTS

CHECKED: ME

APPROVED: GRANT STACY

DRG. No. H42-2

REV. B SHT. 1/1

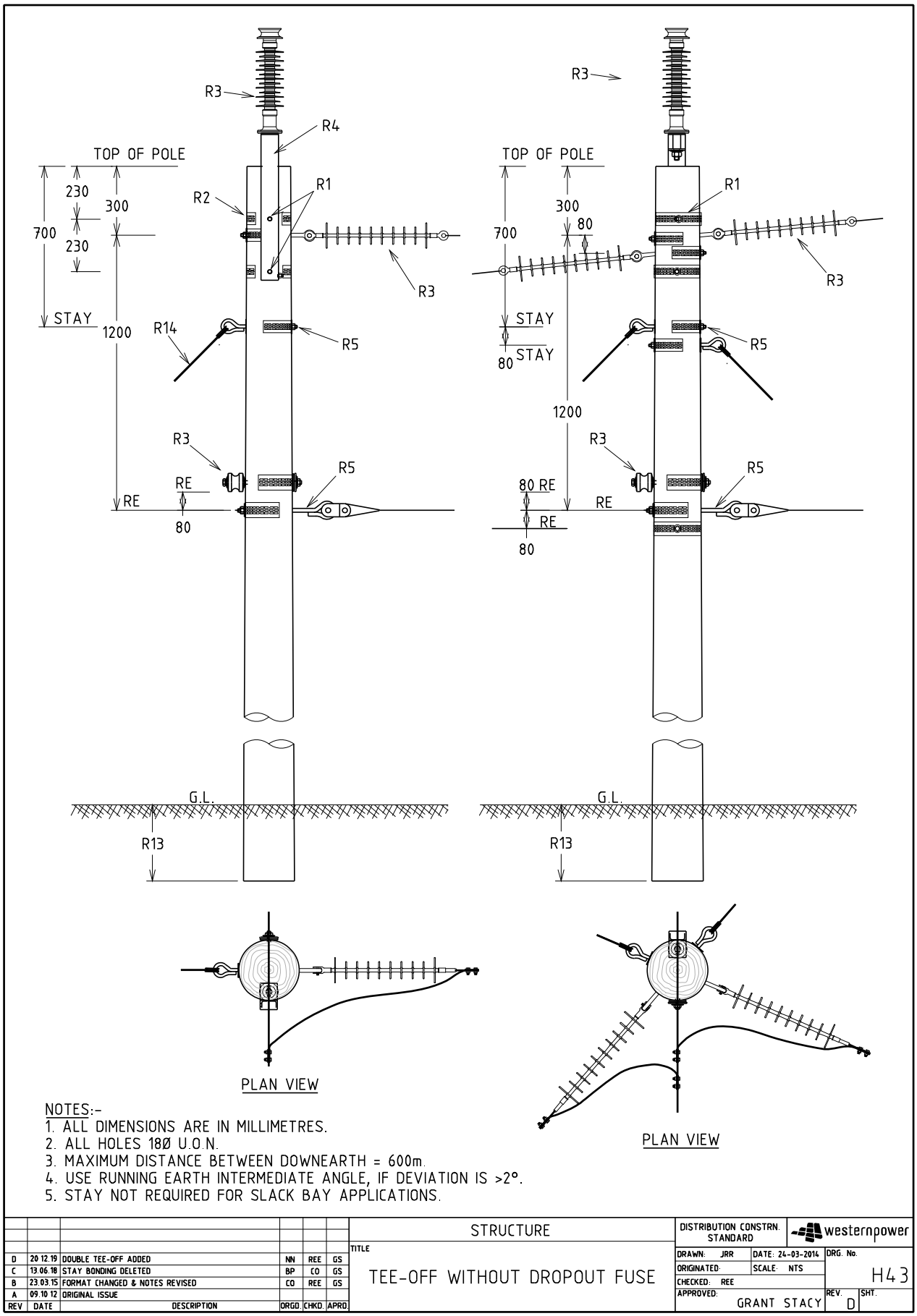

NOTES:-
1. ALL DIMENSIONS ARE IN MILLIMETRES.
2. ALL HOLES 18Ø U.O.N.
3. MAXIMUM DISTANCE BETWEEN DOWNEARTH = 600m.
4. USE RUNNING EARTH INTERMEDIATE ANGLE, IF DEVIATION IS >2°.
5. STAY NOT REQUIRED FOR SLACK BAY APPLICATIONS.

REV	DATE	DESCRIPTION	ORGD.	CHKD.	APRD.
D	20.12.19	DOUBLE TEE-OFF ADDED	NN	REE	GS
C	13.06.18	STAY BONDING DELETED	BP	CO	GS
B	23.03.15	FORMAT CHANGED & NOTES REVISED	CO	REE	GS
A	09.10.12	ORIGINAL ISSUE			

STRUCTURE

TITLE: TEE-OFF WITHOUT DROPOUT FUSE

DISTRIBUTION CONSTRN. STANDARD

westernpower

DRAWN: JRR | DATE: 24-03-2014 | DRG. No. H43

ORIGINATED: | SCALE: NTS

CHECKED: REE

APPROVED: GRANT STACY | REV. D | SHT.

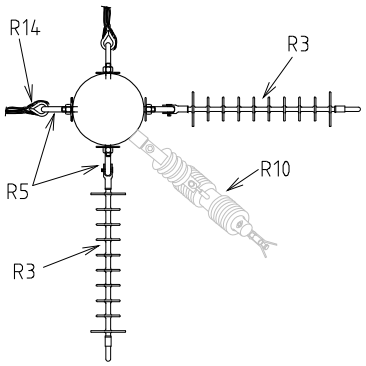

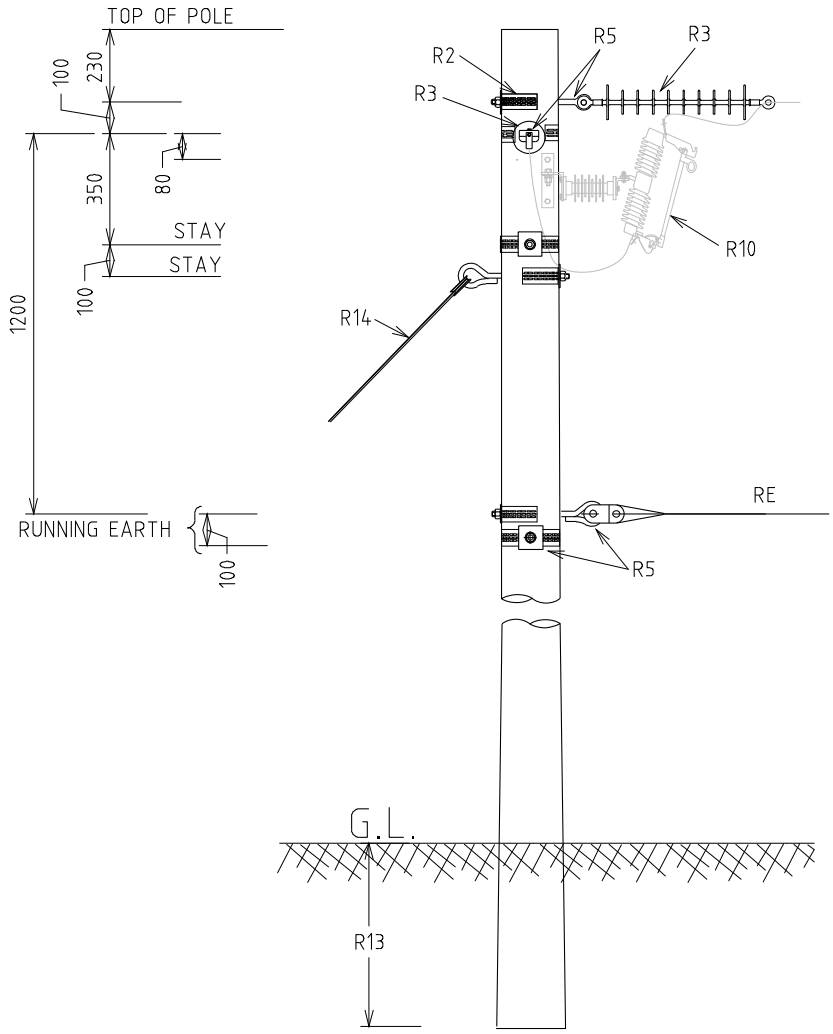

NOTES:
1. ALL DIMENSIONS ARE IN MILLIMETRES.
2. ALL HOLES 18Φ U.O.N.
3. MAXIMUM DISTANCE BETWEEN DOWNEARTH = 600m.

REV	DATE	DESCRIPTION	ORGD.	CHKD.	APRD
E	23.08.22	DOF ADDED	CQ	NMc	GS
D	15.01.16	DRAWING NUMBER CHANGED TO 44-1	FK	ME	GS
C	04.12.14	FORMAT CHANGED & BONDING WITH RE TO STAY DELETED	JC	REE	GS
B	21.05.12	ORIGINAL ISSUE			

STRUCTURE

TITLE

DOUBLE TERMINATION

DISTRIBUTION CONSTRN. STANDARD

westernpower

DRAWN: JRR | DATE: 24-03-2014 | DRG. No. H44-1

ORIGINATED: | SCALE: NTS

CHECKED: REE

APPROVED: GRANT STACY | REV. E | SHT.

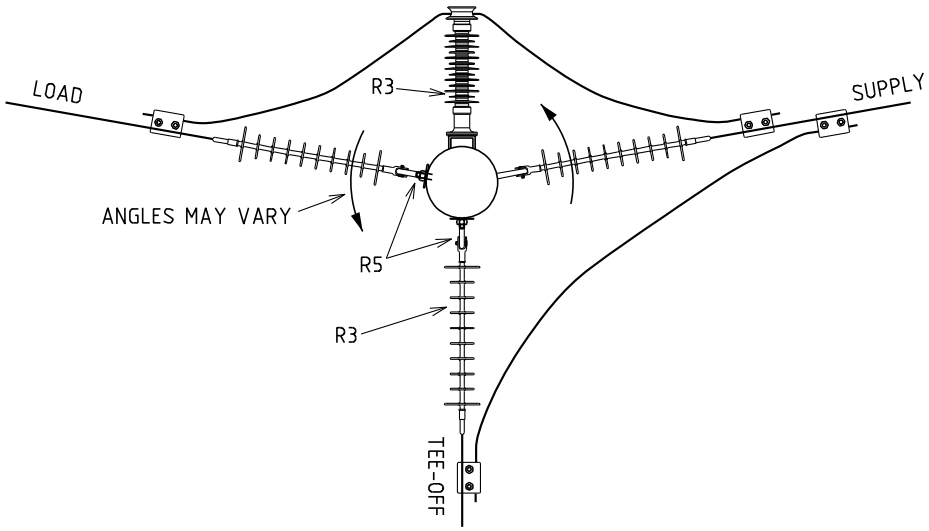

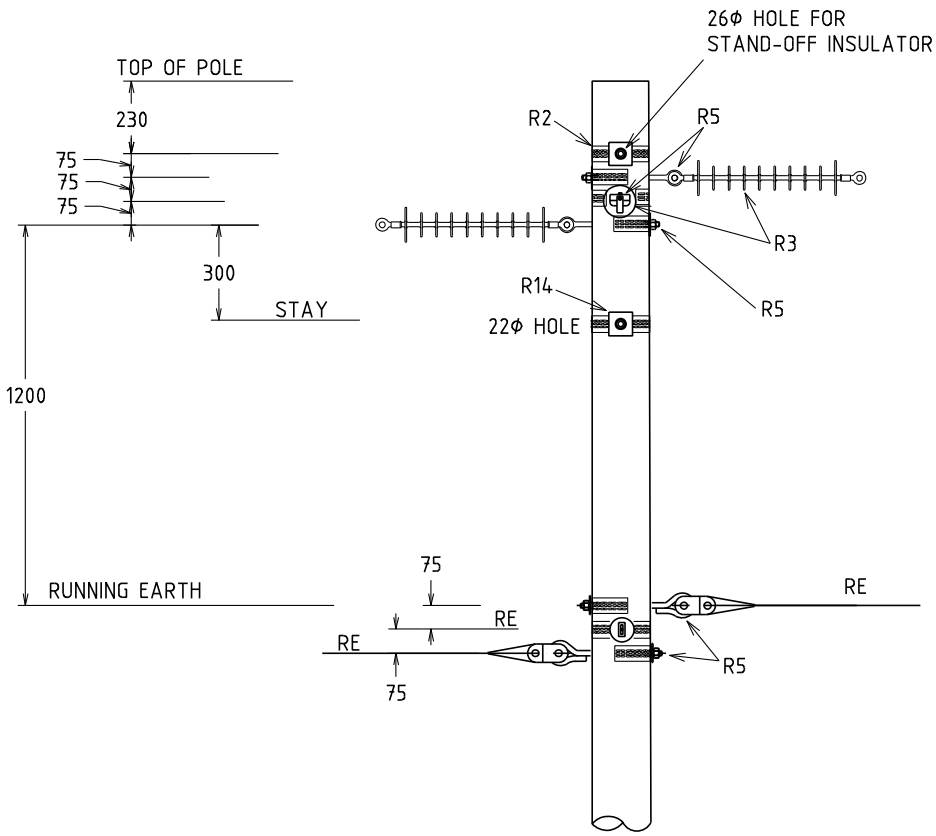

NOTES:
1. ALL HOLES 18ϕ U.O.N.
2. MAXIMUM DISTANCE BETWEEN DOWNEARTH = 600m.
3. STAY POSITIONING AND NUMBER OF STAYS AS PER OVERHEAD LINE DESIGN MANUAL.

REV	DATE	DESCRIPTION	ORGD.	CHKD.	APRD
B	23.05.16	STAND-OFF INSULATOR ADDED	FK	CO	GS
A	15.01.16	ORIGINAL ISSUE	FK	ME	GS

STRUCTURE

TITLE: TRIPLE TERMINATION

DISTRIBUTION CONSTRN. STANDARD

westernpower

DRAWN: JRR | DATE: 30-11-2015 | DRG. No. H44-2

ORIGINATED: FK | SCALE: NTS

CHECKED: ME

APPROVED: GRANT STACY | REV. B | SHT.

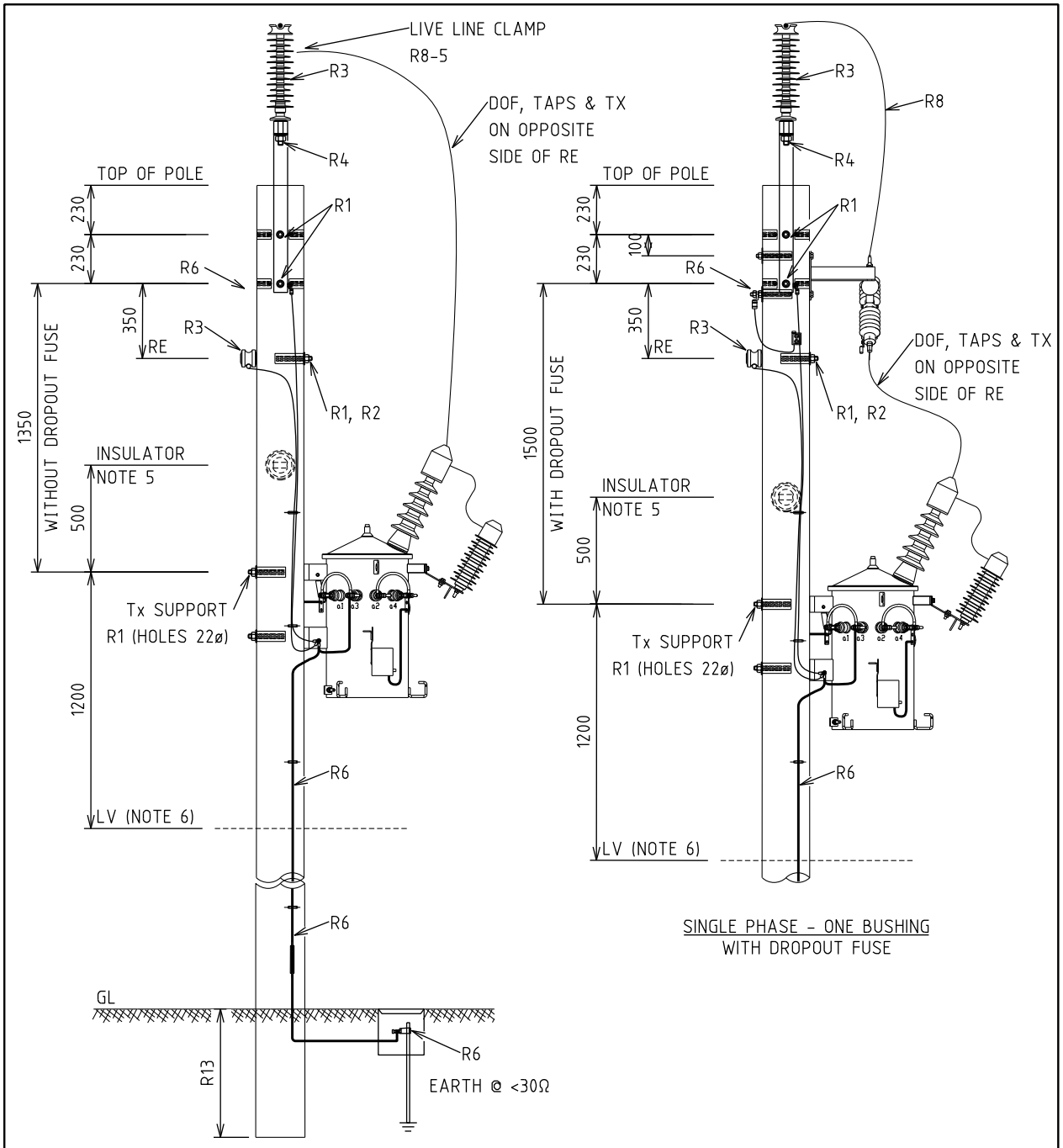

NOTES:
1. ALL DIMENSIONS ARE IN MILLIMETRES.
2. ALL HOLES 18Φ U.O.N.
3. SEE R12/1 FOR LV ARRANGEMENT DETAILS.
4. SEE H49 FOR EARTH & LV PHASE CONNECTIONS.
5. REFER TO H48-1 FOR MULTIPLE TRANSFORMERS.
6. FOR MAINTENANCE ONLY, REFER TO R12-1.

REV.	DATE	DESCRIPTION	ORGD.	CHKD.	APRD
J	16.12.25	POLE TOP EARTHING ADDED	CO	KT	MM
H	08.11.17	TRANSFORMER TYPE CHANGED	NMc	CO	GS
G	21.12.15	NOTES & Tx LOCATION REVISED	ME	REE	GS
F	16.11.15	TRANSFORMER LOCATION OPTION ADDED	ME	REE	GS

STRUCTURE

TITLE: SINGLE PHASE NETWORK INTERMEDIATE TRANSFORMER WITH OR WITHOUT DROPOUT FUSE

DISTRIBUTION CONSTRN. STANDARD

westernpower

DRAWN: JRR | DATE: 24-03-2024 | DRG. No. H46-1

ORIGINATED: | SCALE: NTS

CHECKED: REE

APPROVED: GRANT STACY | REV. J | SHT. 1/1

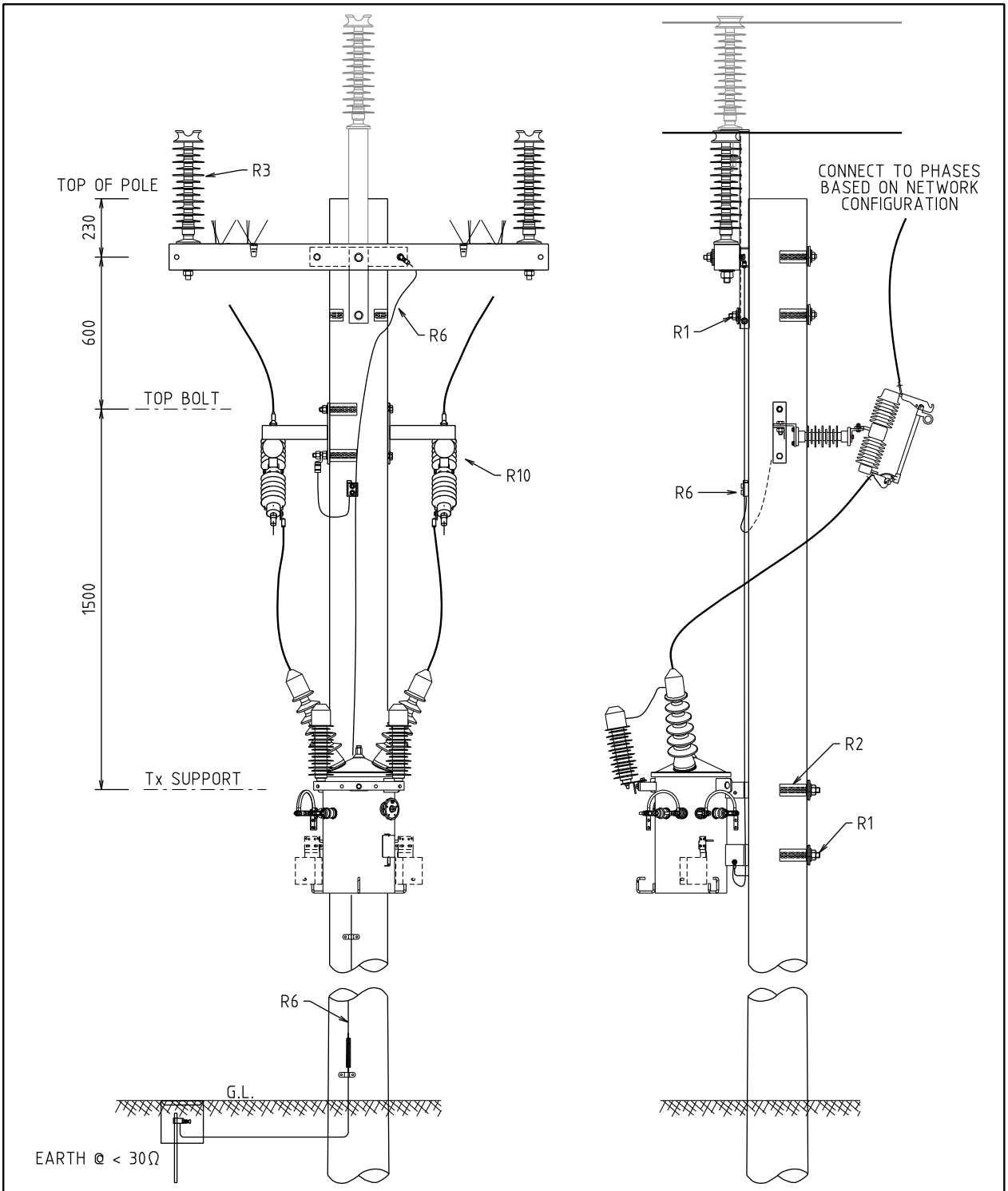

NOTES:
1. ALL DIMENSIONS ARE IN MILLIMETRES.
2. MAXIMUM DISTANCE BETWEEN DOWNEARTH = 600m
3. ALL HOLES 18Φ U.O.N.
4. SEE R12/1 FOR LV ARRANGEMENT DETAILS.
5. REMOVE CENTRE PHASE IF 2PH CONSTRUCTION

REV.	DATE	DESCRIPTION	ORGD.	CHKD.	APRD
B	16.12.25	POLE TOP EARTHING ADDED	CO	KT	MM
A	28.01.20	ORIGINAL ISSUE	NN	REE	GS

STRUCTURE

TITLE: 3 PHASE NO RE OR 2 PHASE NETWORK AND 2 PHASE TRANSFORMER WITH DROPOUT FUSE

DISTRIBUTION CONSTRN. STANDARD

westernpower

DRAWN: JRR	DATE: 16-01-2020	DRG. No.	
ORIGINATED: NN	SCALE: NTS	H46-2	
CHECKED: REE			
APPROVED: GRANT STACY		REV. B	SHT. 1/1

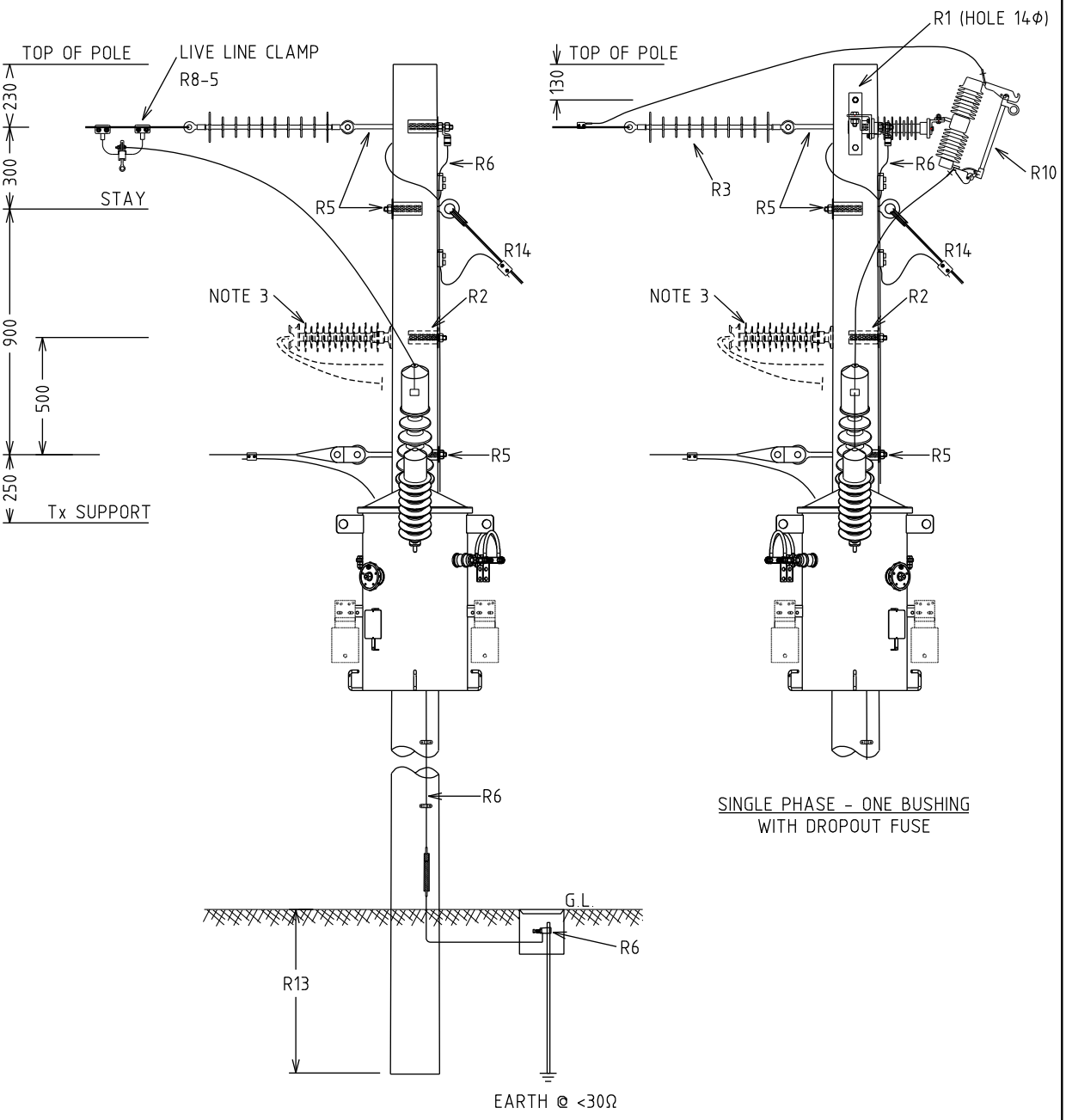

NOTES:
1. ALL DIMENSIONS ARE IN MILLIMETRES U.O.N.
2. ALL HOLES 18Φ U.O.N.
3. REFER TO H48-1 FOR MULTIPLE TRANSFORMERS.

REV.	DATE	DESCRIPTION	ORGD.	CHKD.	APRD
G	16.12.25	POLE TOP EARTHING ADDED	CO	KT	MM
F	31.10.17	TRANSFORMER TYPE CHANGED	NMc	CO	GS
E	05.01.15	FORMAT CHANGED. RE TO STAY CONNECTION REMOVED	JC	REE	GS
D	09.05.12	ORIGINAL ISSUE			

STRUCTURE

TITLE: SINGLE PHASE NETWORK AND TERMINATION TRANSFORMER WITH OR WITHOUT DROPOUT FUSE

DISTRIBUTION CONSTRN. STANDARD

westernpower

DRAWN: JRR | DATE: 24-03-2014 | DRG. No. H47-1

ORIGINATED: | SCALE: NTS

CHECKED: REE

APPROVED: GRANT STACY | REV. G | SHT. 1/1

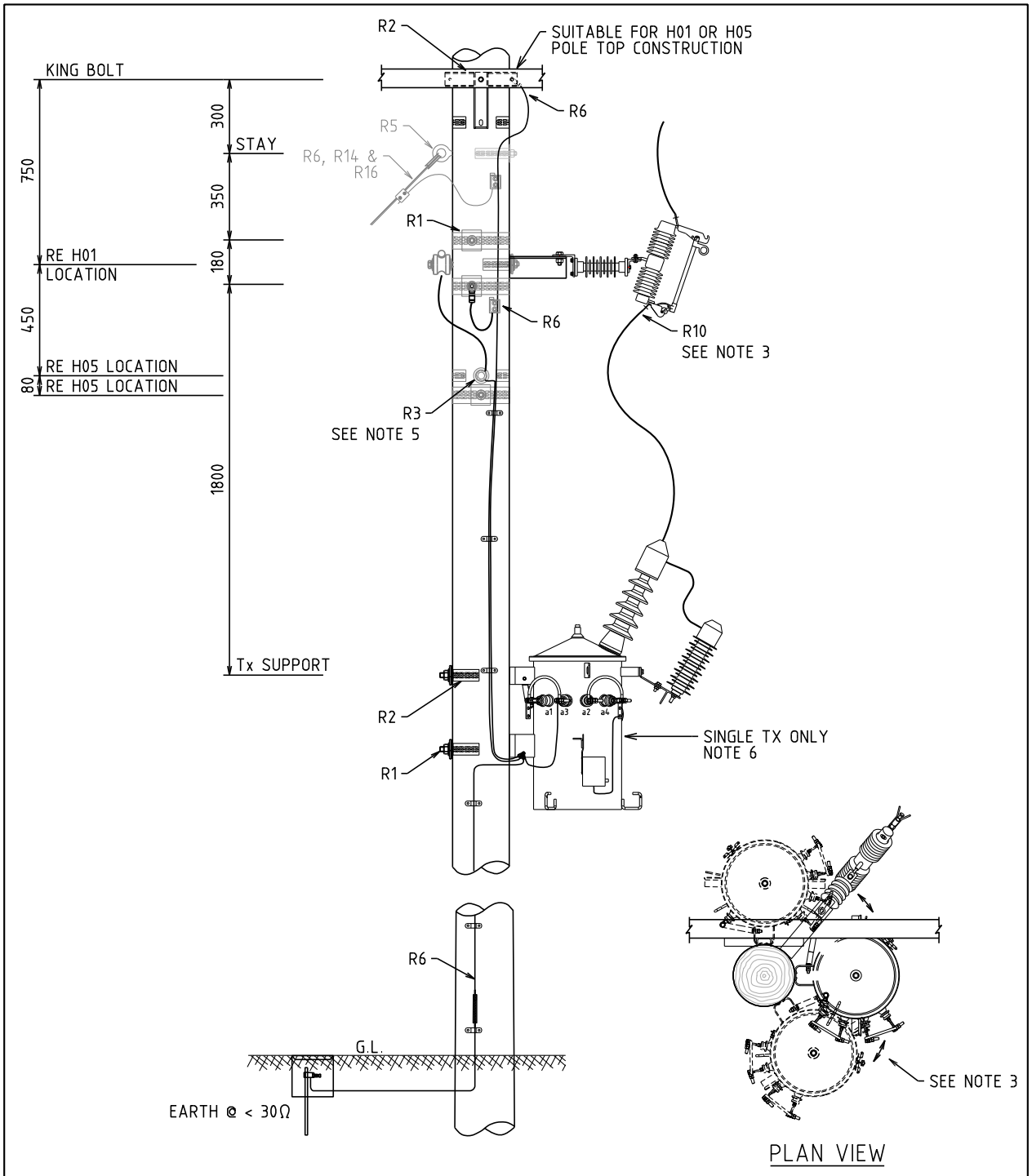

NOTES:
1. ALL DIMENSIONS ARE IN MILLIMETRES.
2. MAXIMUM DISTANCE BETWEEN DOWNEARTH = 600m
3. Tx & DOF ORIENTED TO ACHIEVE MAXIMUM CLEARANCE.
4. MAINTAIN 400mm SEPARATION BETWEEN RUNNING EARTH AND TAPS.
5. RUNNING EARTH (RE) POSITION IS RELATED TO H01 OR H05.
6. IF LARGER SUPPLY REQUIRED USE 3 PHASE TRANSFORMER.

REV.	DATE	DESCRIPTION	ORGD.	CHKD.	APRD.
H	27.05.26	DIMENSION ADDED BACK	VAS	KT	CO
G	16.12.25	POLE TOP EARTHING ADDED	CO	KT	MM
F	14.11.19	MODIFIED TO INCORPORATE H05	NN	NMc	GS
E	09.11.17	TRANSFORMER TYPE CHANGED	NMc	CO	GS
D	21.12.15	FORMAT CHANGED	ME	REE	GS
C	28.05.12	ORIGINAL ISSUE			

STRUCTURE

TITLE: 3 PHASE WITH RE NETWORK AND 1 PHASE TRANSFORMER WITH DROPOUT FUSE

DISTRIBUTION CONSTRN. STANDARD

westernpower

DRAWN: JRR | DATE: 24-03-2014 | DRG. No. H47-2

ORIGINATED: | SCALE: NTS

CHECKED: REE

APPROVED: GRANT STACY

REV. H | SHT. 1/1

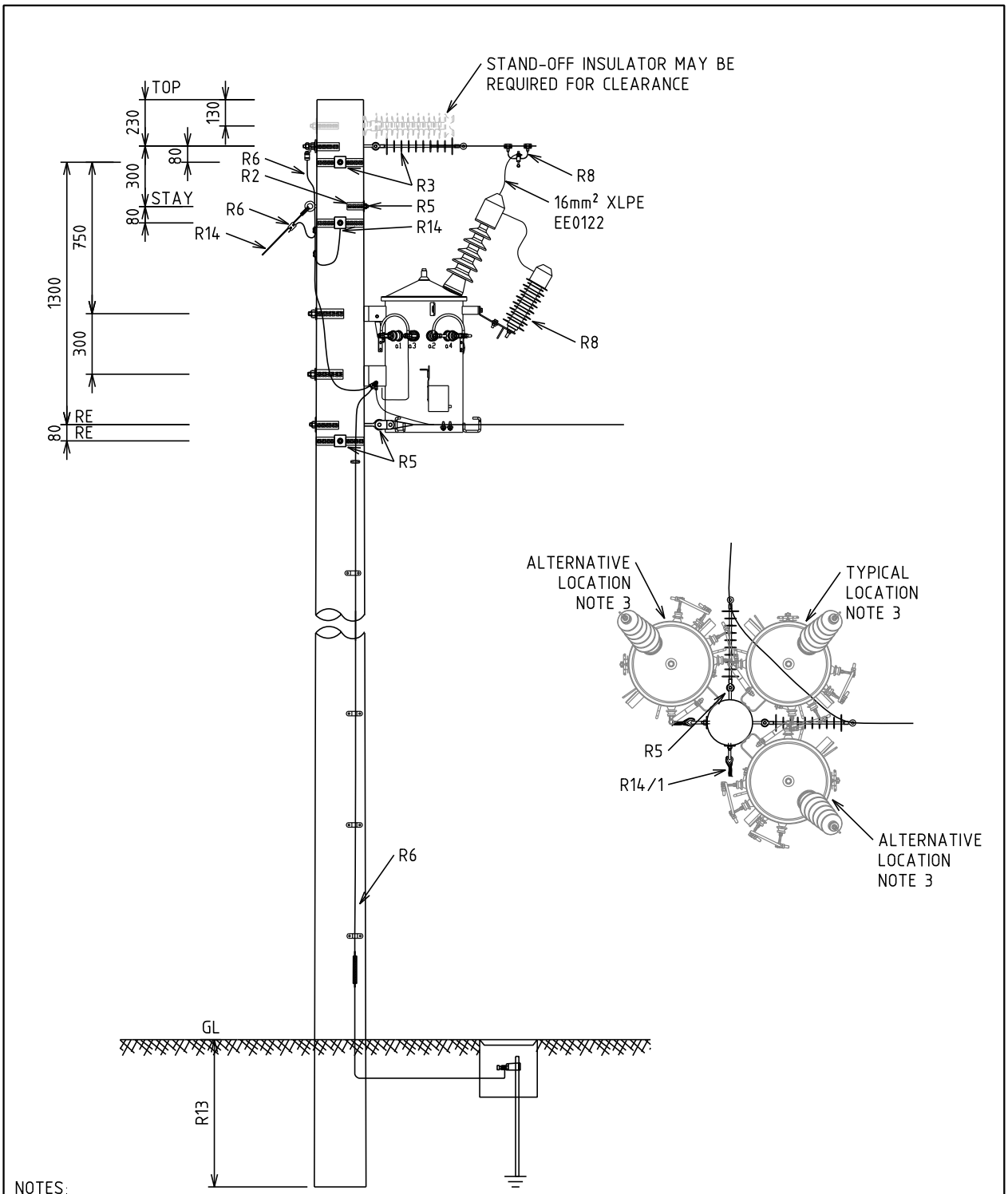

NOTES:
1. ALL DIMENSIONS ARE IN MILLIMETRES.
2. ALL HOLES 18Φ U.O.N.
3. DEVIATION ANGLES AND STAY LOCATIONS VARY. POSITION Tx TO SUPPLY CUSTOMER AND MAINTAIN TAP CLEARANCES AS PER DCSH R8-1-1
4. SEE R12/1 FOR LV ARRANGEMENT DETAILS.

REV.	DATE	DESCRIPTION	ORGD.	CHKD.	APRD.
E	05.11.26	Tx ORIENTATION UPDATED. NOTES UPDATED	CO	NMc	MM
D	16.12.25	EARTHING SYSTEM MODIFIED	CO	KT	MM
C	09.11.17	TRANSFORMER TYPE CHANGED	NMc	CO	GS
B	21.12.15	NOTE 6 ADDED	REE	ME	GS
A	16.11.15	ORIGINAL ISSUE	ME	REE	GS

STRUCTURE

TITLE: SINGLE PHASE NETWORK DOUBLE TERMINATION AND TRANSFORMER WITHOUT DROPOUT FUSE

DISTRIBUTION CONSTRN. STANDARD

westernpower

DRAWN: JRR | DATE: 18-06-2015 | DRG. No. H47-3

ORIGINATED: CO | SCALE: NTS

CHECKED: REE

APPROVED: GRANT STACY | REV. E | SHT. 1/1

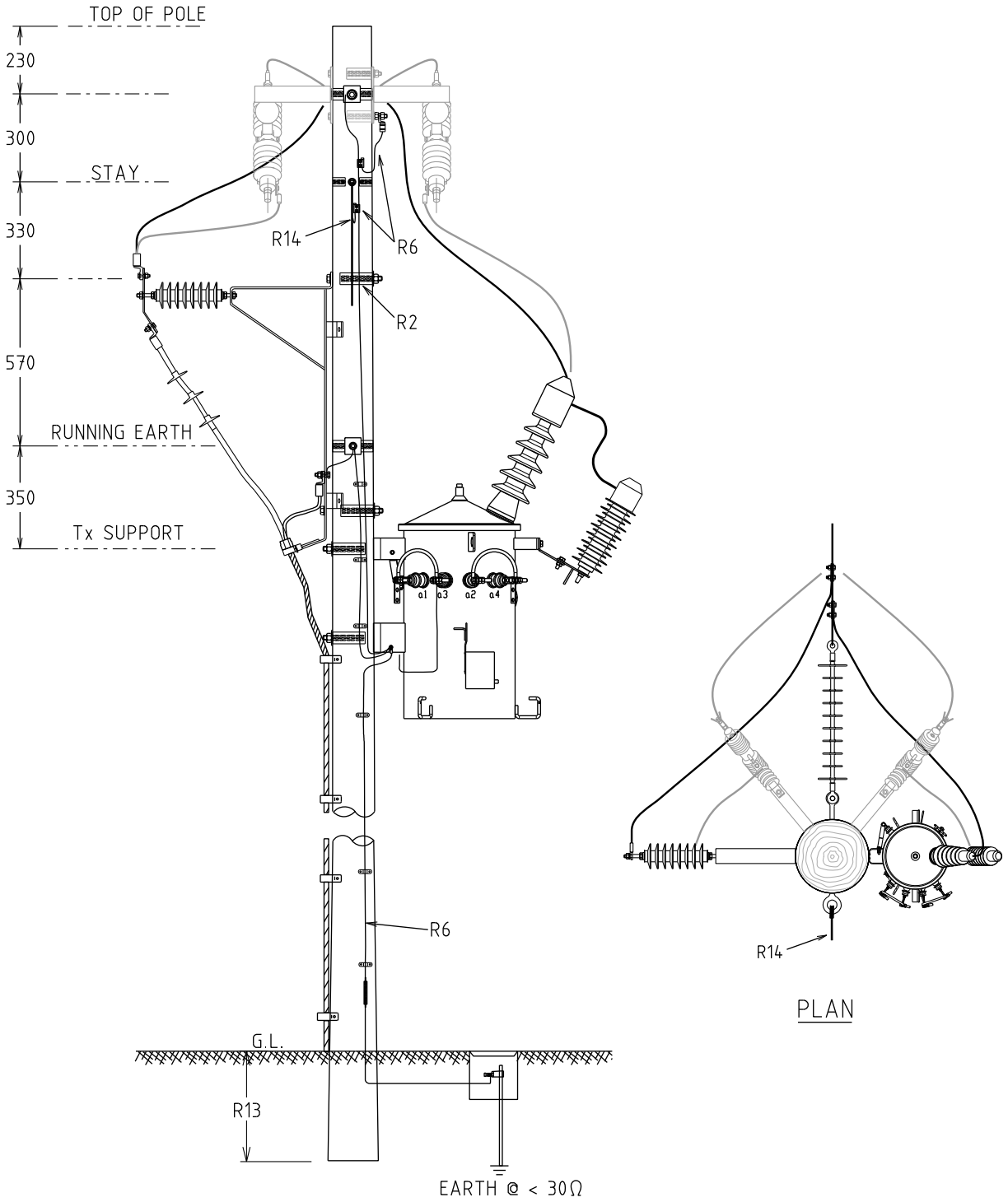

NOTES:
1. ALL DIMENSIONS ARE IN MILLIMETRES.
2. ALL HOLES 18Φ U.O.N.
3. POSITION Tx TO SUPPLY CUSTOMER AND MAINTAIN CLEARANCE.
4. STAY POSITIONING AS PER OVERHEAD LINE DESIGN MANUAL.
5. SEE R12/1 FOR LV ARRANGEMENT DETAILS.

REV.	DATE	DESCRIPTION	ORGD.	CHKD.	APRD
B	16.12.25	POLE TOP EARTHING ADDED	CO	KT	MM
A	24.01.20	ORIGINAL ISSUE	NN	REE	GS

STRUCTURE

TITLE: SINGLE PHASE NETWORK WITH CABLE TERMINATION AND TRANSFORMER WITH OR WITHOUT DROPOUT FUSE

DISTRIBUTION CONSTRN. STANDARD

westernpower

DRAWN: JRR	DATE: 15-01-2020	DRG. No. H47-4
ORIGINATED: NN	SCALE: NTS	
CHECKED: REE		
APPROVED: GRANT STACY		REV. B / SHT. 1/1

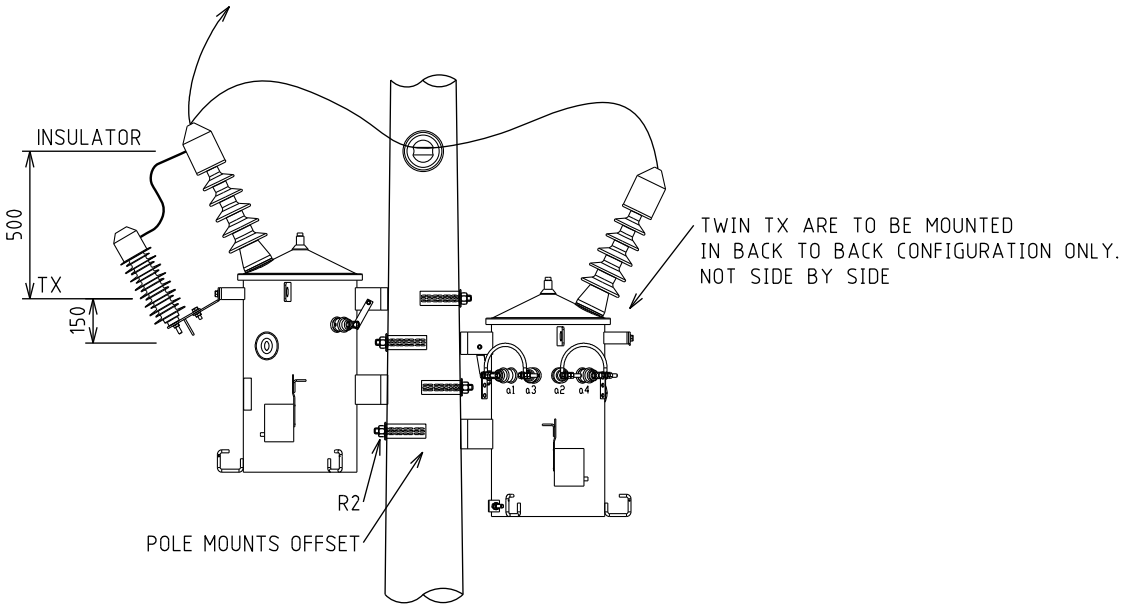

DOUBLE ARRANGEMENT

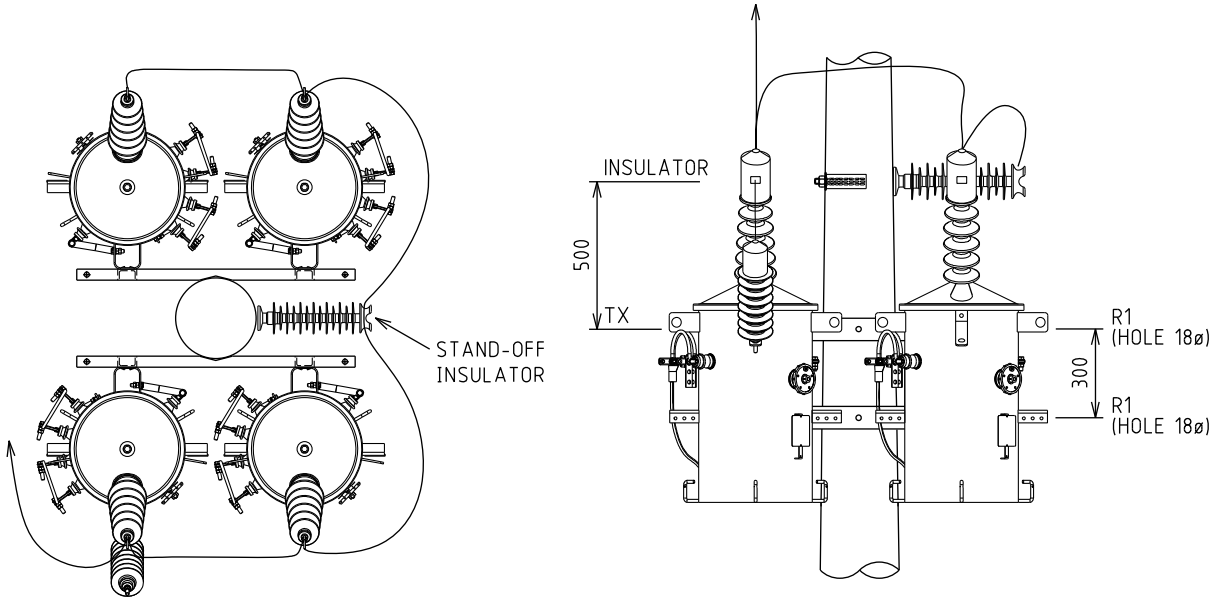

TRIPLE OR QUAD TX's ARRANGEMENT
(ONLY QUAD LAYOUT SHOWN FOR CLARITY)

NOTE:
1. ALL DIMENSIONS ARE IN MILLIMETRES.
2. ALL HOLES 18Φ U.O.N.
3. TWIN TX's ARE TO BE MOUNTED IN BACK TO BACK CONFIGURATION ONLY.
4. SEE R12/1 FOR LV ARRANGEMENT DETAILS.
5. SEE H49 & H50 FOR LV PHASE AND NEUTRAL CONNECTIONS.
6. ALL TRANSFORMERS MUST BE SAME MANUFACTURER AND SIZE.
7. REFER TO APPROPRIATE H40 SERIES DRAWING TO CONSTRUCT POLE.

REV.	DATE	DESCRIPTION	ORGD.	CHKD.	APRD
H	16.12.25	TITLE UPDATED. TWIN TX's LOCATION MODIFIED	CO	KT	MM
G	29.05.20	SPARE SURGE ARRESTER REMOVED	NMc	NN	GS
F	16.11.18	TRANSFORMER TYPE CHANGED	NMc	NN	GS

STRUCTURE

TITLE: SINGLE PHASE TRANSFORMER MOUNTING FOR TWIN, TRIPLE OR QUAD ARRANGEMENT

DISTRIBUTION CONSTRN. STANDARD

westernpower

DRAWN: JRR | DATE: 24-03-2014 | DRG. No. H48-1

ORIGINATED: | SCALE: NTS

CHECKED: REE

APPROVED: GRANT STACY | REV. H | SHT. 1/1

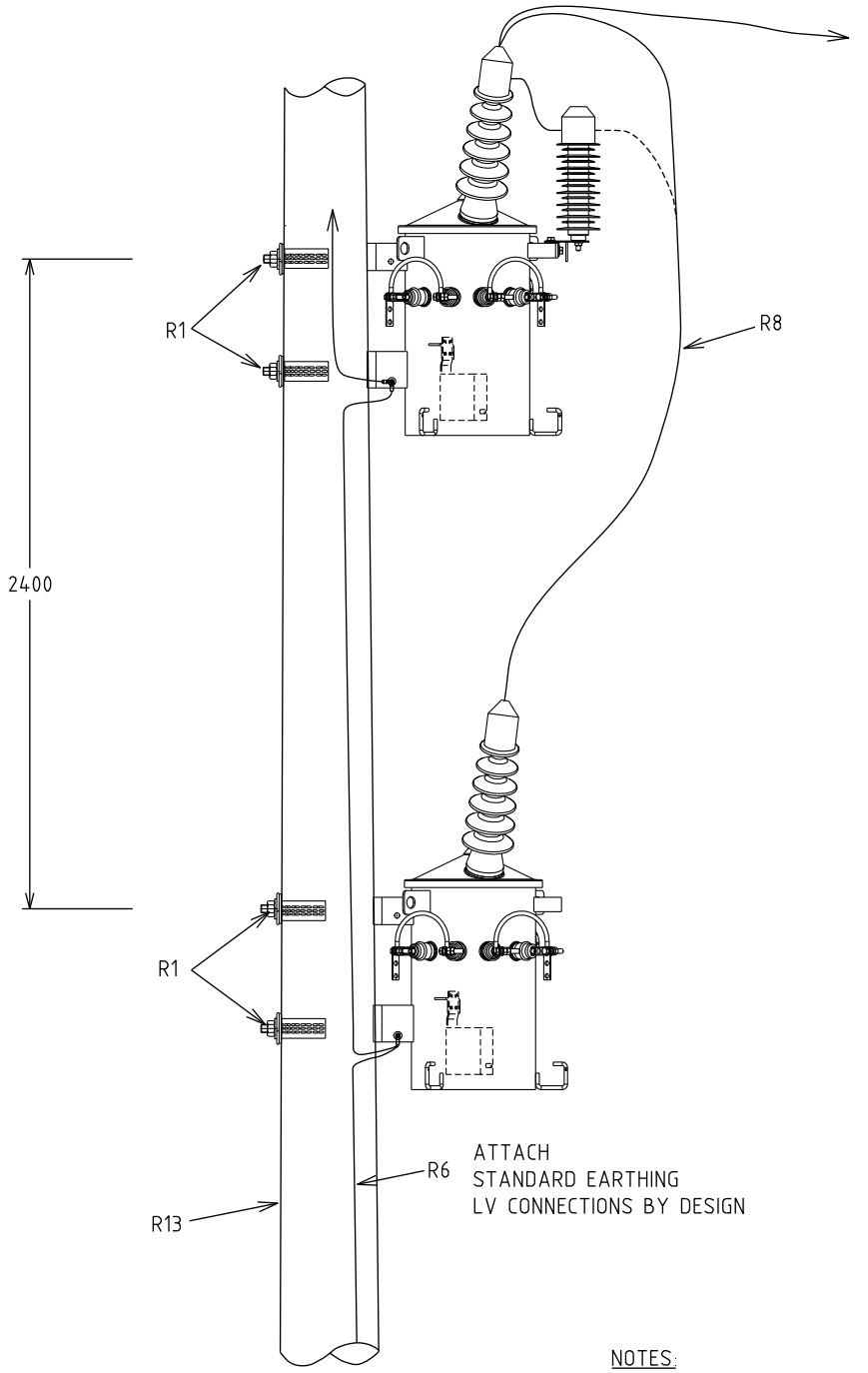

NOTES:
1. ALL DIMENSIONS ARE IN MILLIMETRES.
2. REFER TO H46-2 SERIES DRAWING TO CONSTRUCT POLE.

REV.	DATE	DESCRIPTION	ORGD.	CHKD.	APRD
C	16.12.25	POLE TOP EARTHING ADDED	CO	KT	MM
B	16.11.18	TRANSFORMER TYPE CHANGED	NMc	NN	GS
A	28.02.11	ORIGINAL ISSUE			

STRUCTURE

TITLE: SINGLE PHASE 2 BUSHING TRANSFORMER MOUNTING FOR VERTICAL ARRANGEMENT

DISTRIBUTION CONSTRN. STANDARD

westernpower

DRAWN: JRR | DATE: 21-03-2014 | DRG. No. H48-2

ORIGINATED: | SCALE: NTS

CHECKED: REE

APPROVED: GRANT STACY | REV. C | SHT. 1/1

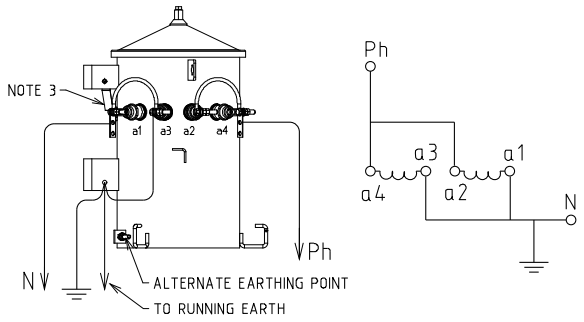

CONNECTION FOR 240V LV SUPPLY

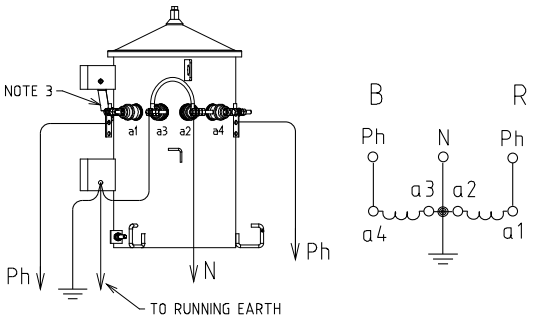

CONNECTION FOR 480V LV SUPPLY

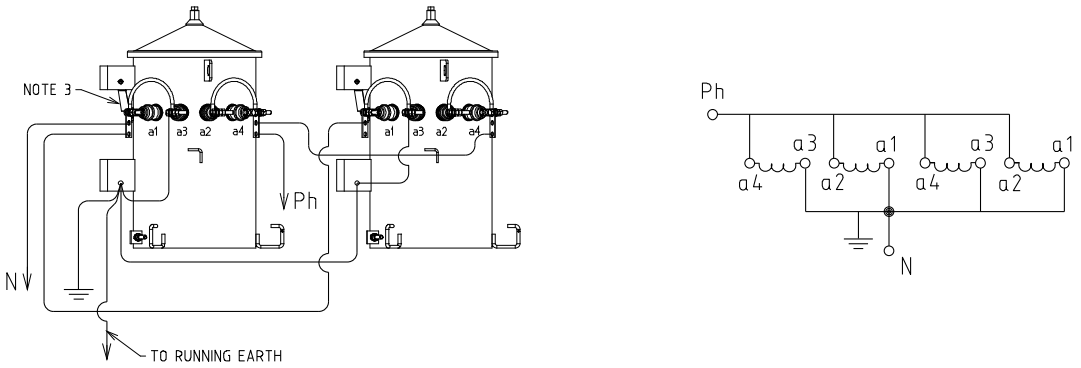

PARALLEL TX's FOR 240V LV SUPPLY

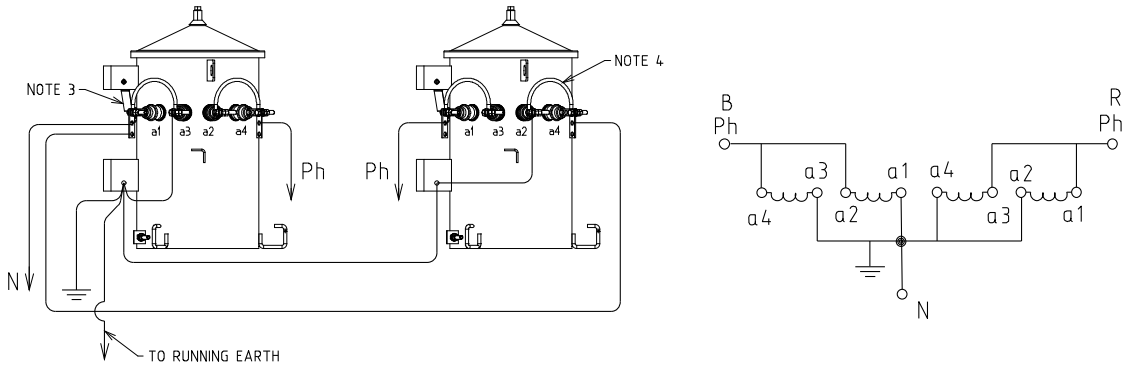

PARALLEL TX's FOR 480V LV SUPPLY

NOTE:-
1. SEE R12/1 FOR LV ARRANGEMENT DETAILS.
2. HV BUSHINGS NOT SHOWN.
3. ENSURE ER (EARTH RETURN) LINK TO THE TANK IN PLACE - SEE R12-1.
4. BUSHING WITH LV LINKS CAN BE USED INTERCHANGABLY.

REV	DATE	DESCRIPTION	ORGD.	CHKD.	APRD.
C	31.10.17	TRANSFORMER TYPE CHANGED	NMc	CO	GS
B	13.10.14	FORMAT CHANGED AND NOTE ADDED	FK	REE	GS
A	13.07.00	ORIGINAL ISSUE			

STRUCTURE

TITLE

EARTH & LV PHASE CONNECTIONS

DISTRIBUTION CONSTRN. STANDARD

westernpower

DRAWN: JRR | DATE: 24-03-2014 | DRG. No. H49

ORIGINATED: | SCALE: NTS

CHECKED: REE

APPROVED: GRANT STACY | REV. C | SHT.

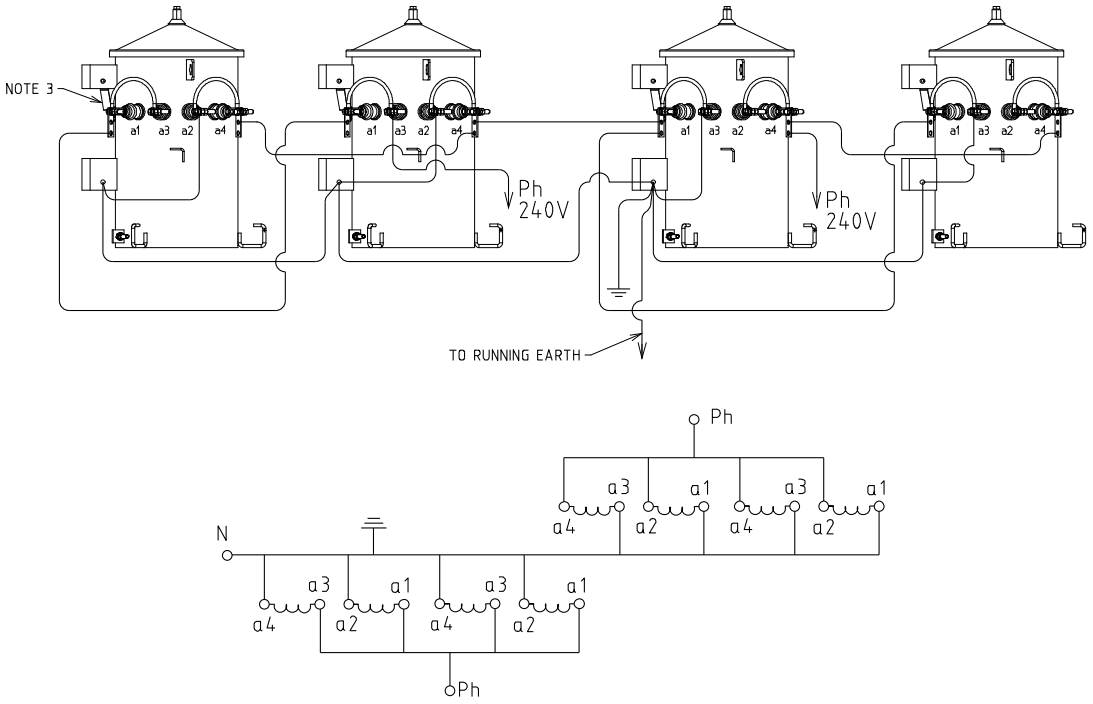

4 TX's FOR 480V LV SUPPLY

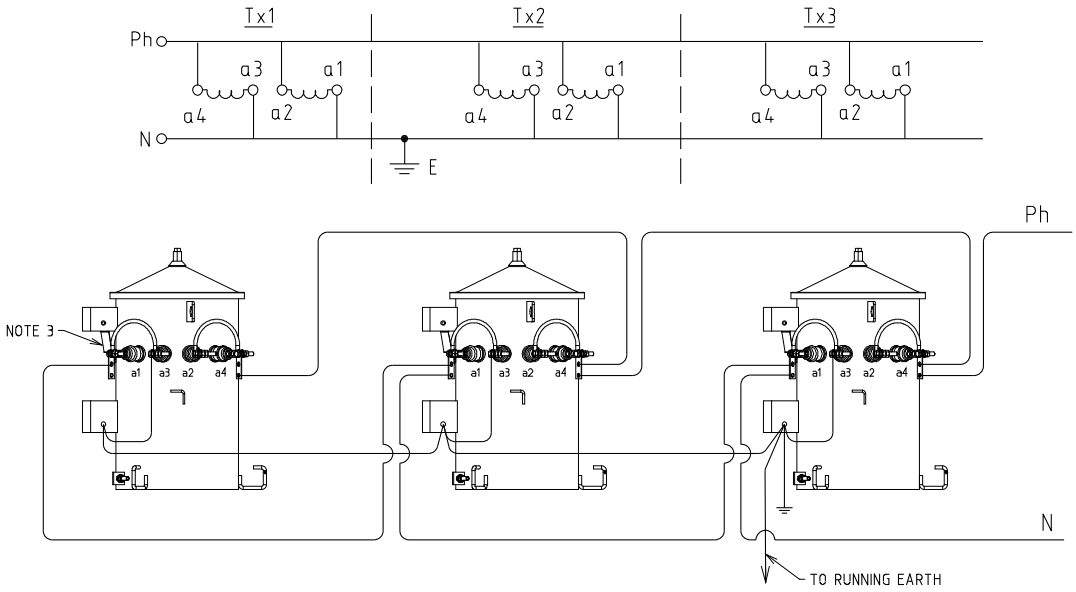

CONNECTIONS FOR THREE PARALLEL TX's - 240 LV SUPPLY

NOTE:-
1. SEE R12/1 FOR LV ARRANGEMENT DETAILS.
2. HV BUSHINGS NOT SHOWN.
3. ENSURE ER (EARTH RETURN) LINK TO THE TANK IN PLACE - SEE R12-1.
4. BUSHING WITH LV LINKS CAN BE USED INTERCHANGABLY.

REV	DATE	DESCRIPTION	ORGD.	CHKD.	APRD.
C	30.10.17	TRANSFORMER TYPE CHANGED	NMc	CO	GS
B	13.10.14	FORMAT CHANGED AND NOTE ADDED	FK	REE	GS
A	13.07.00	ORIGINAL ISSUE			

STRUCTURE

TITLE
EARTH & LV PHASE CONNECTIONS
THREE & FOUR TRANSFORMERS SETUP

DISTRIBUTION CONSTRN. STANDARD

westernpower

DRAWN: JRR | DATE: 24-03-2014 | DRG. No. H50
ORIGINATED: | SCALE: NTS
CHECKED: REE
APPROVED: GRANT STACY | REV. C | SHT.

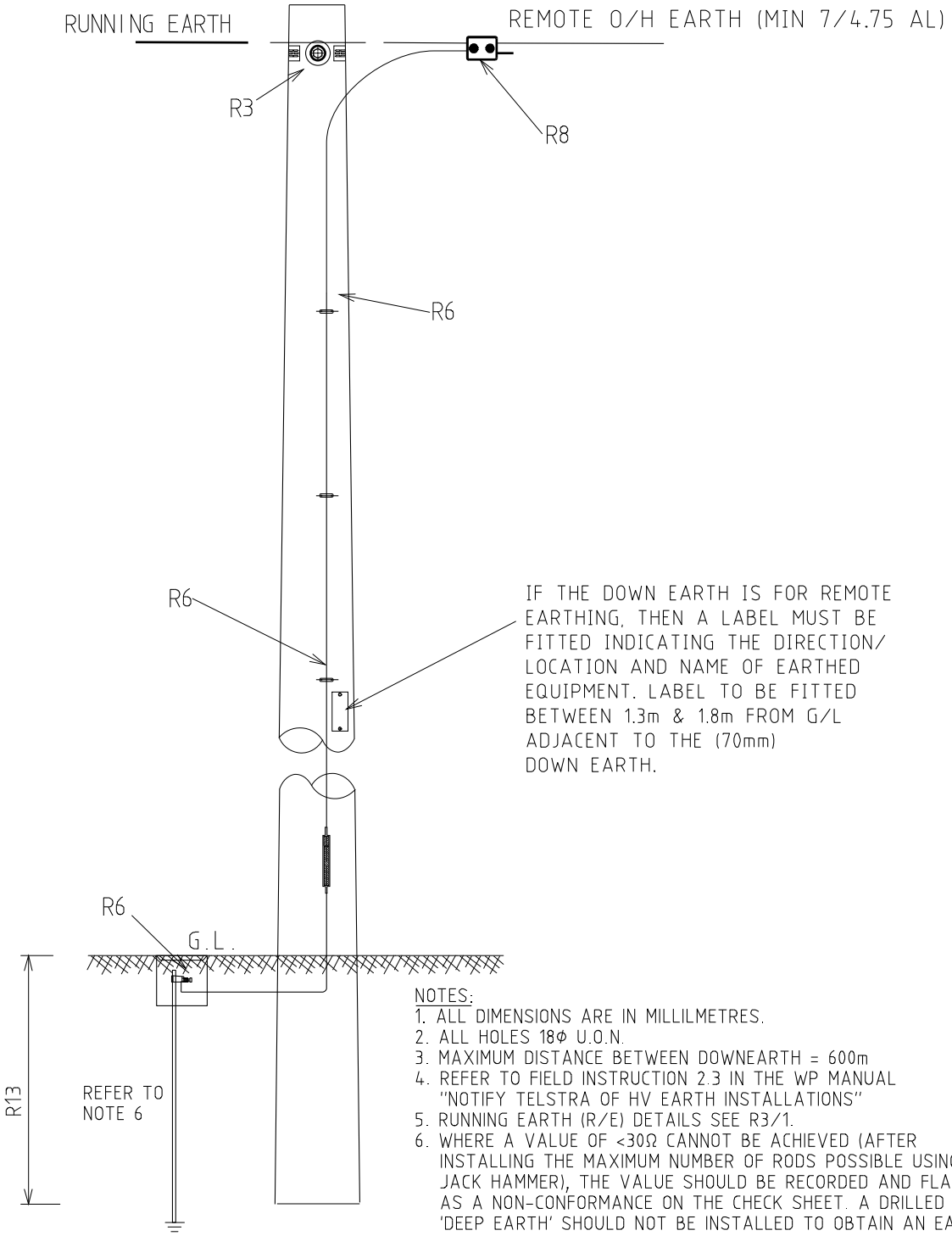

NOTES:
1. ALL DIMENSIONS ARE IN MILLILMETRES.
2. ALL HOLES 18Φ U.O.N.
3. MAXIMUM DISTANCE BETWEEN DOWNEARTH = 600m
4. REFER TO FIELD INSTRUCTION 2.3 IN THE WP MANUAL "NOTIFY TELSTRA OF HV EARTH INSTALLATIONS"
5. RUNNING EARTH (R/E) DETAILS SEE R3/1.
6. WHERE A VALUE OF <30Ω CANNOT BE ACHIEVED (AFTER INSTALLING THE MAXIMUM NUMBER OF RODS POSSIBLE USING A JACK HAMMER), THE VALUE SHOULD BE RECORDED AND FLAGGED AS A NON-CONFORMANCE ON THE CHECK SHEET. A DRILLED 'DEEP EARTH' SHOULD NOT BE INSTALLED TO OBTAIN AN EARTH RESISTANCE READING LESS <30Ω. PLEASE NOTE THAT THE EARTH RESISTANCE MEASUREMENT SHOULD BE TAKEN OFF THE EARTH STAKE BEFORE IT IS CONNECTED TO THE UNDERSLUNG RUNNING EARTH. PLEASE NOTE THAT THIS RELAXATION APPLIES TO INTERMEDIATE POLES. EARTH RESISTANCE VALUES AT KEY STRUCTURE POLES SUCH AS TRANSFORMERS, POLE TOP SWITCHES, CABLE HEADS ETC. ARE STILL REQUIRED TO BE EARTHED TO <30Ω.

REV	DATE	DESCRIPTION	ORGD.	CHKD.	APRD.
B	14.11.18	NOTES REVISED	REE	CO	GS
A	10.05.08	ORIGINAL ISSUE			

STRUCTURE

TITLE

DOWN EARTH-RUNNING EARTH

DISTRIBUTION CONSTRN. STANDARD

westernpower

DRAWN: JRR	DATE: 24-03-2014	DRG. No. H52-1
ORIGINATED:	SCALE: NTS	
CHECKED: REE		
APPROVED: GRANT STACY		REV. B / SHT.

REMOTE/EXTENDED EARTH INSTALLATION NOTES TO BE USED WHEN STANDARD DOWN EARTH INSTALLATION CANNOT BE APPLIED.

1. EARTH PIT CANNOT BE FITTED ADJACENT TO POLE DUE TO TELSTRA OR OTHER TECHNICAL REQUIREMENTS.

2. THE 15M SEPARATION APPLIES TO TELSTRA EQUIPMENT UNLESS SPECIFIC SITE VARIATION IS APPROVED.

3. IF 15Ms OR THE APPROVED SEPARATION CANNOT BE ACHIEVED, THEN A O/H EARTH (Min 7/4.75 AL) TO THE NEXT POLE MAY BE INSTALLED AND A STANDARD H52-1 CONNECTION APPLIED. UPGRADE R/E SECTION IF REQUIRED.

4. A STANDARD LABEL SIGN TO BE FITTED INDICATING DIRECTION AND LOCATION OF THE WPC EARTH PIT. IF THE DOWN EARTH IS ON THE NEXT POLE THAT POLE MUST ALSO BE LABELLED. SEE H52-1.

5. STANDARD UDS CABLE PROTECTION APPLIES SUCH AS CONDUIT AT 750mm DEPTH.

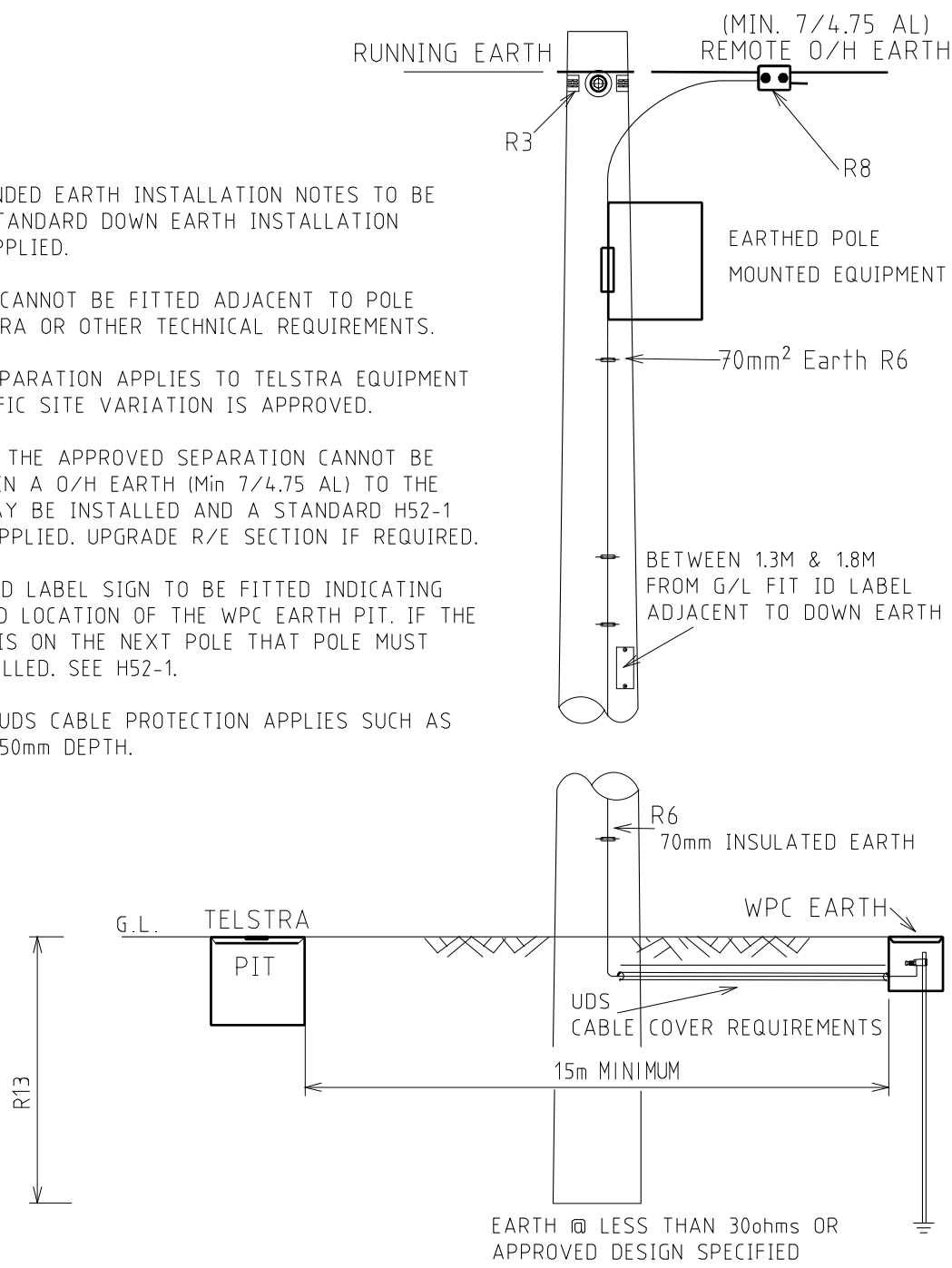

ALTHOUGH THE DRAWING OUTLINES BOTH EXTENDED & REMOTE OPTIONS ONLY ONE SELECTION IS REQUIRED. EXTENDED "E" AWAY FROM THE POLE OR O/H REMOTE "E".

REFER TO FIELD INSTRUCTION 2.3 IN THE WP MANUAL "NOTIFY TELSTRA OF HV EARTH INSTALLATIONS"

NOTES
1. ALL HOLES 18DIA U.O.N.
2. MAXIMUM DISTANCE BETWEEN DOWNEARTH = 600m

REV	DATE	DESCRIPTION	ORGD.	CHKD.	APRD.
A	10.05.18	ORIGINAL ISSUE			

STRUCTURE

TITLE: EXTENDED OR REMOTE DOWN EARTH-RUNNING EARTH

DISTRIBUTION CONSTRN. STANDARD

westernpower

DRAWN: JRR | DATE: 24-03-2014 | DRG. No. H52-2
ORIGINATED: | SCALE: NTS
CHECKED: REE
APPROVED: GRANT STACY | REV. A | SHT.

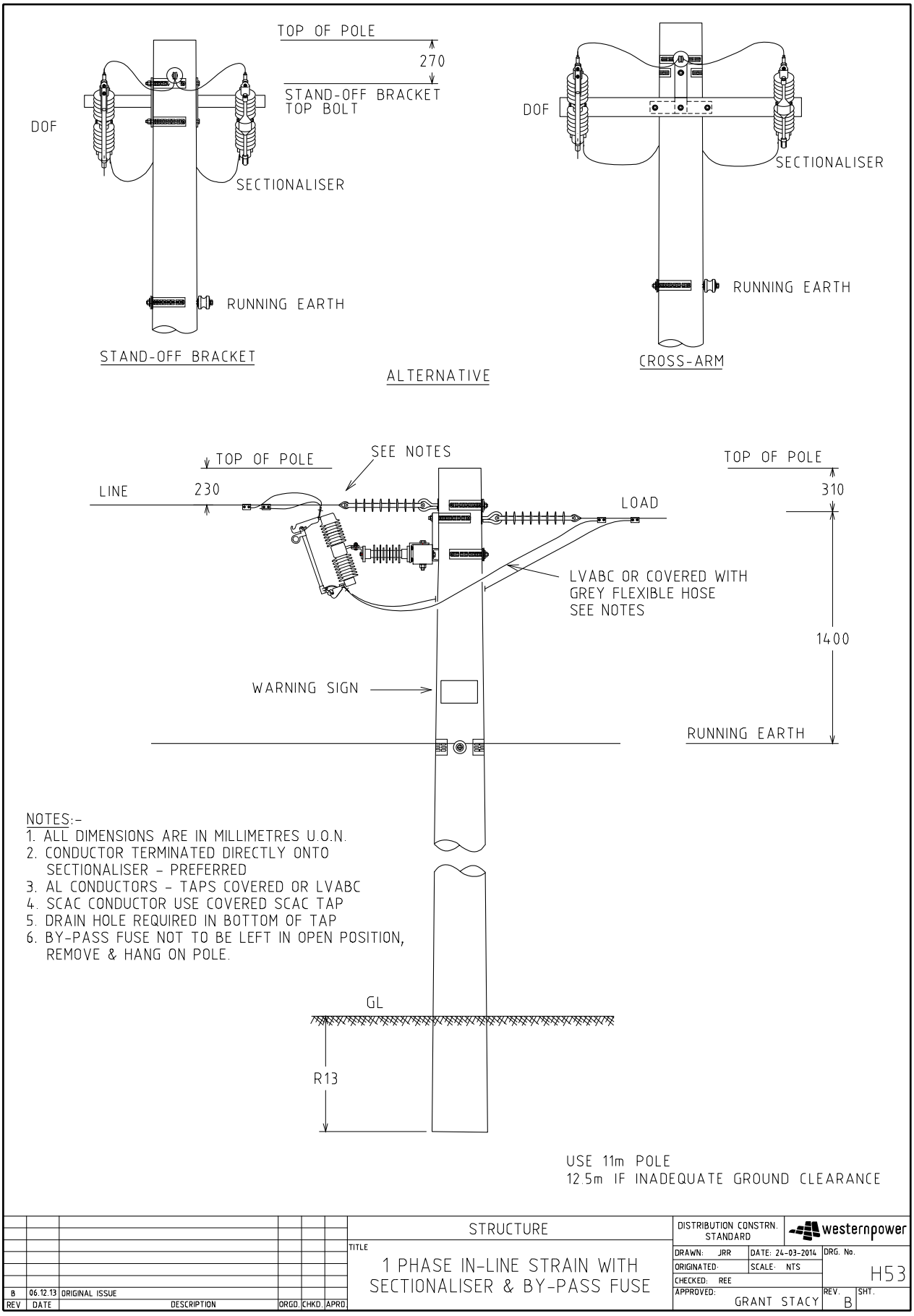
TOP OF POLE
270
STAND-OFF BRACKET
TOP BOLT
DOF
SECTIONALISER
RUNNING EARTH
STAND-OFF BRACKET
ALTERNATIVE
DOF
SECTIONALISER
RUNNING EARTH
CROSS-ARM
TOP OF POLE
SEE NOTES
LINE
230
LOAD
LVABC OR COVERED WITH
GREY FLEXIBLE HOSE
SEE NOTES
WARNING SIGN
TOP OF POLE
310
1400
RUNNING EARTH
NOTES:-
1. ALL DIMENSIONS ARE IN MILLIMETRES U.O.N.
2. CONDUCTOR TERMINATED DIRECTLY ONTO SECTIONALISER – PREFERRED
3. AL CONDUCTORS – TAPS COVERED OR LVABC
4. SCAC CONDUCTOR USE COVERED SCAC TAP
5. DRAIN HOLE REQUIRED IN BOTTOM OF TAP
6. BY-PASS FUSE NOT TO BE LEFT IN OPEN POSITION, REMOVE & HANG ON POLE.
GL
R13
USE 11m POLE
12.5m IF INADEQUATE GROUND CLEARANCE
B 06.12.13 ORIGINAL ISSUE
REV DATE DESCRIPTION ORGD. CHKD. APRD
STRUCTURE
TITLE
1 PHASE IN-LINE STRAIN WITH SECTIONALISER & BY-PASS FUSE
DISTRIBUTION CONSTRN. STANDARD
westernpower
DRAWN: JRR
DATE: 24-03-2014
ORIGINATED:
SCALE: NTS
CHECKED: REE
APPROVED: GRANT STACY
DRG. No. H53
REV. B
SHT.

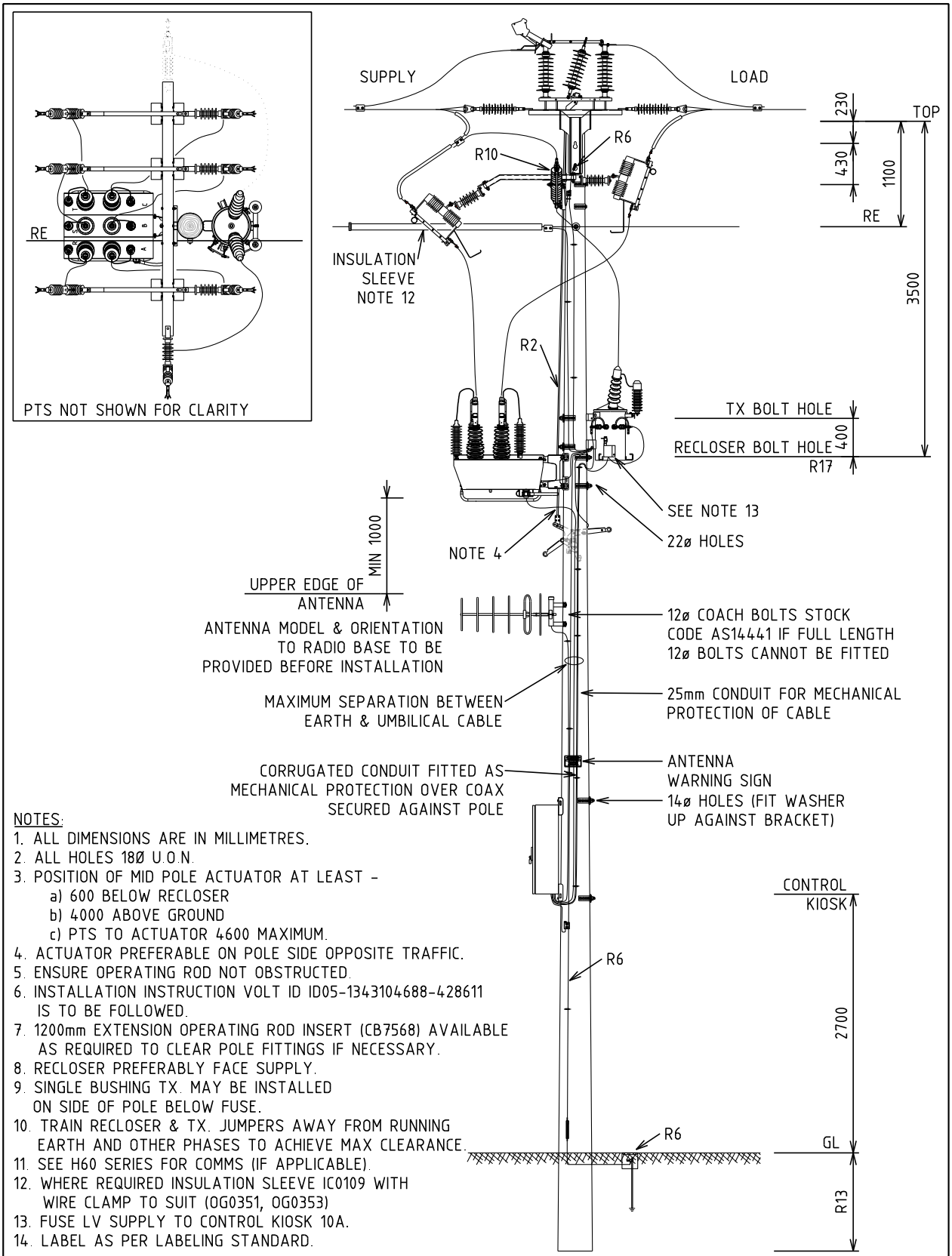

NOTES:
1. ALL DIMENSIONS ARE IN MILLIMETRES.
2. ALL HOLES 18Ø U.O.N.
3. POSITION OF MID POLE ACTUATOR AT LEAST -
   a) 600 BELOW RECLOSER
   b) 4000 ABOVE GROUND
   c) PTS TO ACTUATOR 4600 MAXIMUM.
4. ACTUATOR PREFERABLE ON POLE SIDE OPPOSITE TRAFFIC.
5. ENSURE OPERATING ROD NOT OBSTRUCTED.
6. INSTALLATION INSTRUCTION VOLT ID ID05-1343104688-428611 IS TO BE FOLLOWED.
7. 1200mm EXTENSION OPERATING ROD INSERT (CB7568) AVAILABLE AS REQUIRED TO CLEAR POLE FITTINGS IF NECESSARY.
8. RECLOSER PREFERABLY FACE SUPPLY.
9. SINGLE BUSHING TX. MAY BE INSTALLED ON SIDE OF POLE BELOW FUSE.
10. TRAIN RECLOSER & TX. JUMPERS AWAY FROM RUNNING EARTH AND OTHER PHASES TO ACHIEVE MAX CLEARANCE.
11. SEE H60 SERIES FOR COMMS (IF APPLICABLE).
12. WHERE REQUIRED INSULATION SLEEVE IC0109 WITH WIRE CLAMP TO SUIT (OG0351, OG0353)
13. FUSE LV SUPPLY TO CONTROL KIOSK 10A.
14. LABEL AS PER LABELING STANDARD.

REV.	DATE	DESCRIPTION	ORGD.	CHKD.	APRD.
H	23.04.26	RE LOCATION AND NOTES UPDATED	NG	NMc	CO
G	08.12.25	ACTUATOR LOCATION RECTIFIED. TOP POLE EARTHING ADDED. 1P CB REMOVED	CO	KT	MM
F	21.06.19	EARTH CONNECTION METHOD MODIFIED AND NOTES	NMc	CO	GS
E	31.01.18	PTS TYPE CHANGED	REE	JC	GS
D	16.11.17	NOTES AND TRANSFORMER TYPE REVISED	REE	JC	GS
C	05.10.15	NOTE 12 ADDED	KJ	REE	CO

STRUCTURE

TITLE: POLE MOUNTED 3 PH RECLOSER/ LOAD BREAK SWITCH WITH BY-PASS SWITCH

DISTRIBUTION CONSTRN. STANDARD

westernpower

DRAWN: JRR | DATE: 07-10-2014 | DRG. No. H61-1

ORIGINATED: REE | SCALE: NTS

CHECKED: REE

APPROVED: GRANT STACY | REV. H | SHT. 1/1

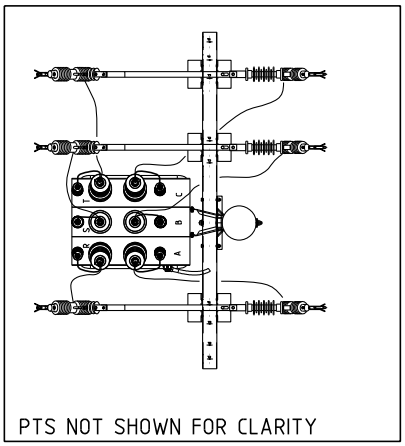

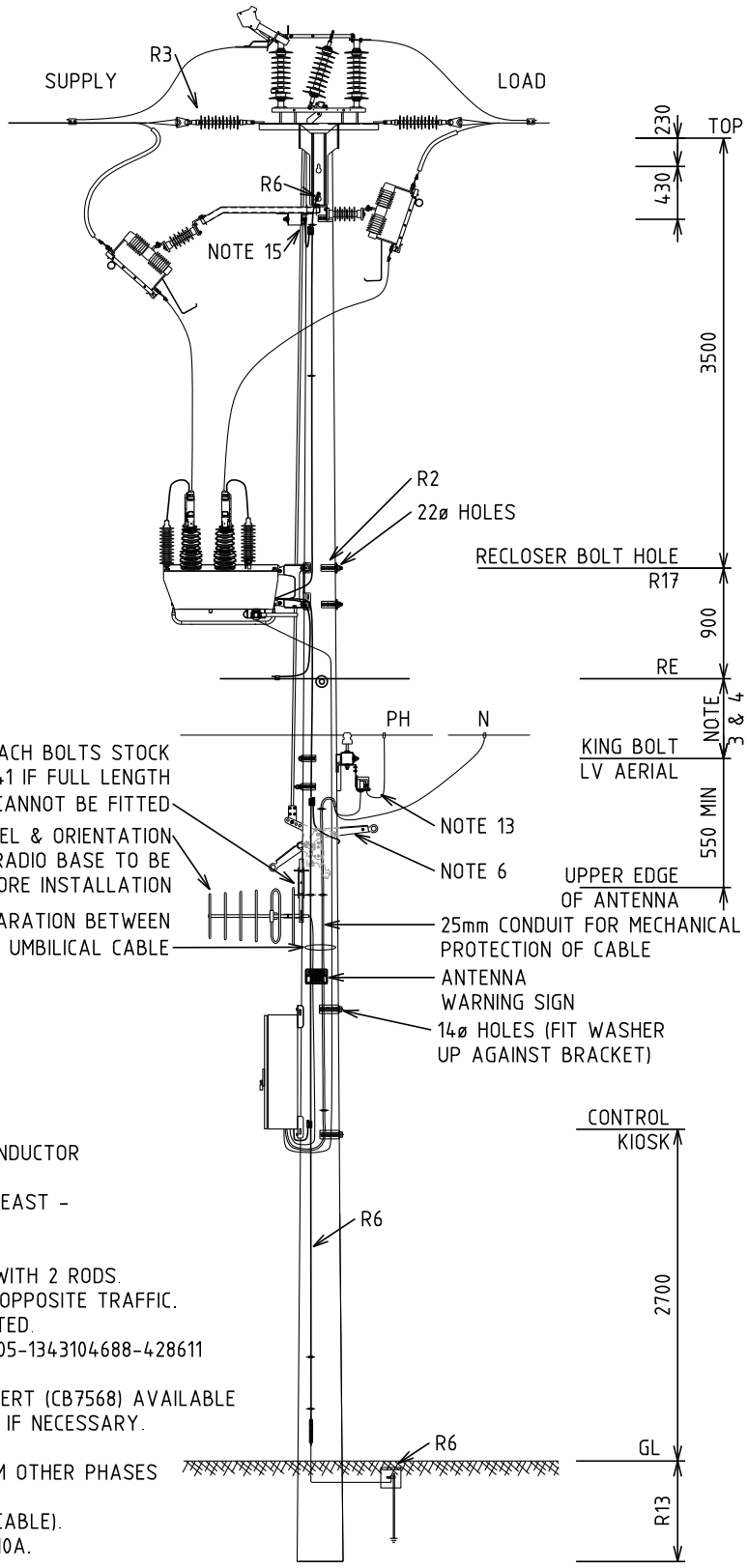

NOTES:
1. ALL DIMENSIONS ARE IN MILLIMETRES.
2. ALL HOLES 18Ø U.O.N.
3. WHEN LV CONDUCTOR IS;
   (a) LV BARE CONDUCTOR –
   650 IF R/E IS SCAC OR SCGZ
   1100 IF R/E IS AAAC.
   (b) LV ABC
   450 FOR ALL TYPES OF R/E CONDUCTOR
4. IF NO RE, RAISE LV TO RE POSITION.
5. POSITION OF MID POLE ACTUATOR AT LEAST –
   a) 600 BELOW LV
   b) 4000 ABOVE GROUND
   c) PTS TO ACTUATOR 4600 MAXIMUM WITH 2 RODS.
6. ACTUATOR PREFERABLE ON POLE SIDE OPPOSITE TRAFFIC.
7. ENSURE OPERATING ROD NOT OBSTRUCTED.
8. INSTALLATION INSTRUCTION VOLT ID ID05-1343104688-428611 IS TO BE FOLLOWED.
9. 1200mm EXTENSION OPERATING ROD INSERT (CB7568) AVAILABLE AS REQUIRED TO CLEAR POLE FITTINGS IF NECESSARY.
10. RECLOSER PREFERABLY FACE SUPPLY.
11. TRAIN RECLOSER JUMPERS AWAY FROM OTHER PHASES TO ACHIEVE MAX CLEARANCE.
12. SEE H60 SERIES FOR COMMS (IF APPLICABLE).
13. FUSE LV SUPPLY TO CONTROL KIOSK 10A.
14. LABEL AS PER LABELING STANDARD
15. ISOLATOR CROSSARM NEEDS TO BE EARTHED.

REV.	DATE	DESCRIPTION	ORGD.	CHKD.	APRD.
G	04.05.26	ACTUATOR LOCATION RECTIFIED, NOTES UPDATED	NG	NMc	CO
F	21.06.19	EARTH CONNECTION METHOD MODIFIED	NMc	CO	GS
E	01.02.18	PTS TYPE CHANGED	REE	JC	GS
D	16.11.17	NOTES REVISED	REE	JC	GS
C	16.06.17	NOTES REVISED	GS	NMc	GS

STRUCTURE

TITLE: POLE MOUNTED 3 PH RECLOSER / LOAD BREAK SWITCH WITH BY-PASS SWITCH (AERIAL LV SUPPLY)

DISTRIBUTION CONSTRN. STANDARD

westernpower

DRAWN: JRR DATE: 07-10-2014
ORIGINATED: REE SCALE: NTS
CHECKED: REE
APPROVED: GRANT STACY

DRG. No. H61-2
REV. G SHT. 1/1

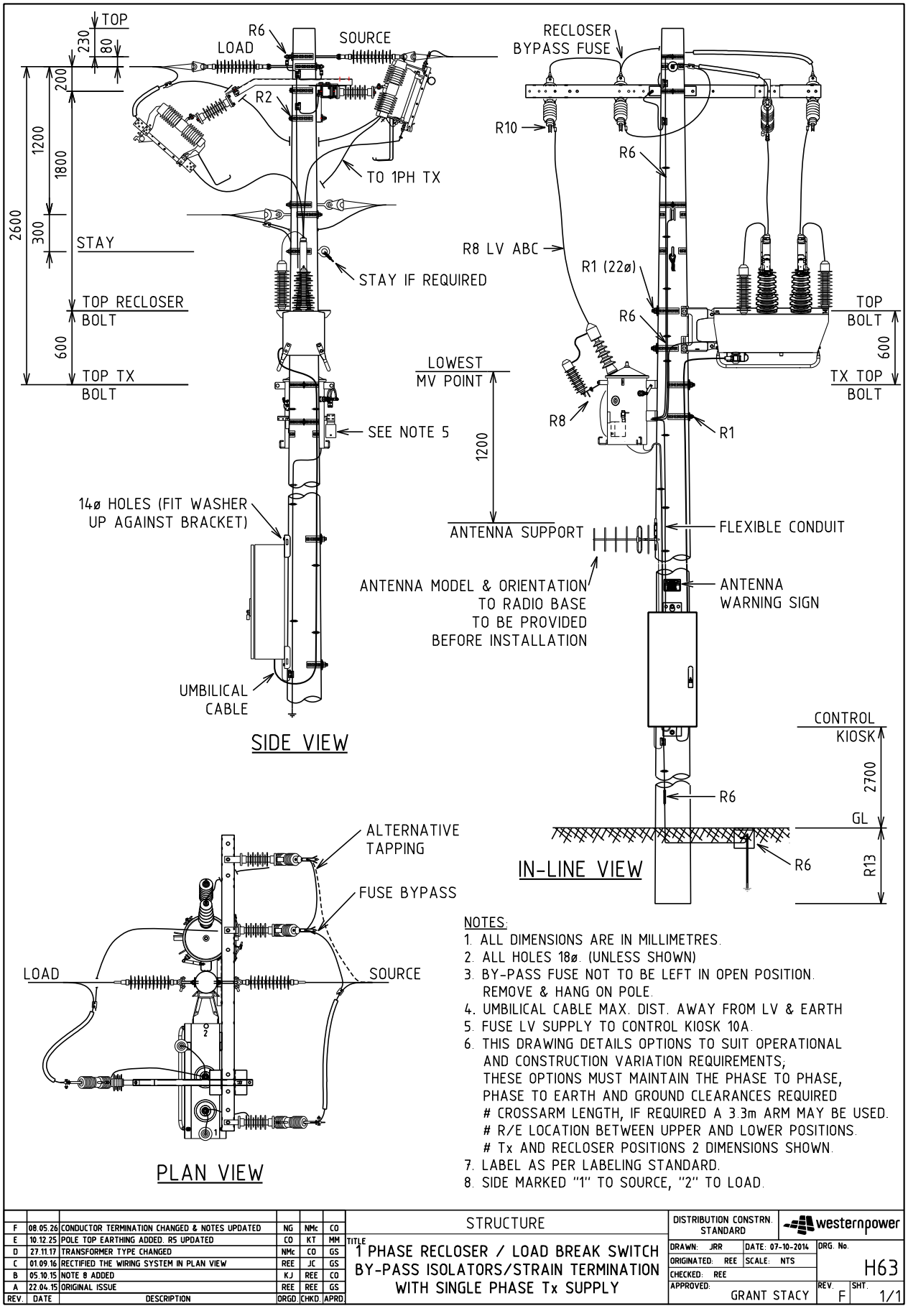

NOTES:
1. ALL DIMENSIONS ARE IN MILLIMETRES.
2. ALL HOLES 18ø. (UNLESS SHOWN)
3. BY-PASS FUSE NOT TO BE LEFT IN OPEN POSITION. REMOVE & HANG ON POLE.
4. UMBILICAL CABLE MAX. DIST. AWAY FROM LV & EARTH
5. FUSE LV SUPPLY TO CONTROL KIOSK 10A.
6. THIS DRAWING DETAILS OPTIONS TO SUIT OPERATIONAL AND CONSTRUCTION VARIATION REQUIREMENTS; THESE OPTIONS MUST MAINTAIN THE PHASE TO PHASE, PHASE TO EARTH AND GROUND CLEARANCES REQUIRED
   # CROSSARM LENGTH, IF REQUIRED A 3.3m ARM MAY BE USED.
   # R/E LOCATION BETWEEN UPPER AND LOWER POSITIONS.
   # Tx AND RECLOSER POSITIONS 2 DIMENSIONS SHOWN.
7. LABEL AS PER LABELING STANDARD.
8. SIDE MARKED "1" TO SOURCE, "2" TO LOAD.

REV.	DATE	DESCRIPTION	ORGD.	CHKD.	APRD.
F	08.05.26	CONDUCTOR TERMINATION CHANGED & NOTES UPDATED	NG	NMc	CO
E	10.12.25	POLE TOP EARTHING ADDED. R5 UPDATED	CO	KT	MM
D	27.11.17	TRANSFORMER TYPE CHANGED	NMc	CO	GS
C	01.09.16	RECTIFIED THE WIRING SYSTEM IN PLAN VIEW	REE	JC	GS
B	05.10.15	NOTE 8 ADDED	KJ	REE	CO
A	22.04.15	ORIGINAL ISSUE	REE	REE	GS

STRUCTURE

TITLE: 1 PHASE RECLOSER / LOAD BREAK SWITCH BY-PASS ISOLATORS/STRAIN TERMINATION WITH SINGLE PHASE Tx SUPPLY

DISTRIBUTION CONSTRN. STANDARD

westernpower

DRAWN: JRR DATE: 07-10-2014

ORIGINATED: REE SCALE: NTS

CHECKED: REE

APPROVED: GRANT STACY

DRG. No. H63

REV. F SHT. 1/1

HV HENDRIX

SPANNING: OVERHEAD COVERED CONDUCTOR
- TERMINATION STRUCTURES TO SPACER 12m MINIMUM.
- SPACER INTERVAL 10m (MAX. 15m, MIN. 7m)

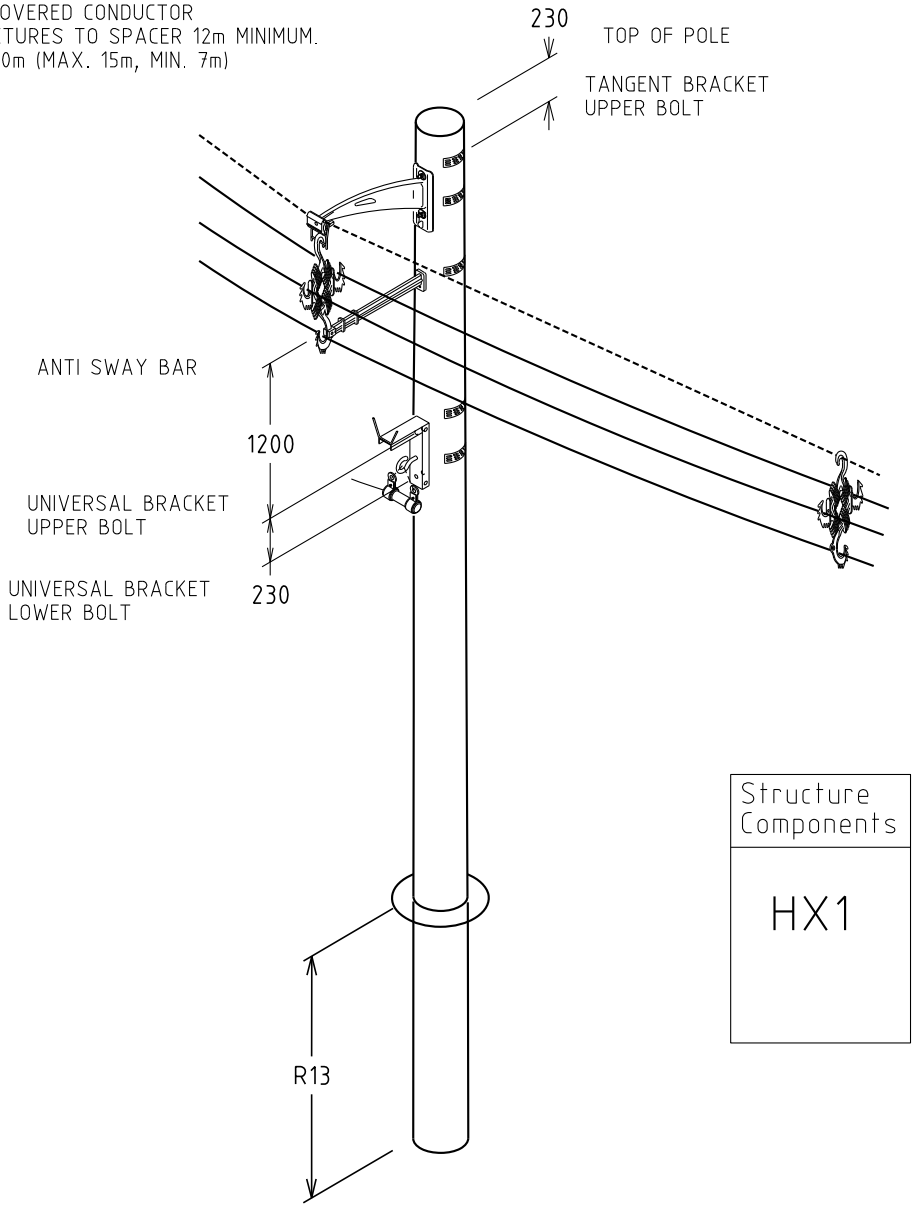

Structure Components

HX1

NOTE:
1. ALL HOLES 18mm DIA. U.O.N.
2. DOWNEARTH - R6
3. MAXIMUM DISTANCE BETWEEN DOWNEARTHS - 150m.

R. No.	DATE	DESCRIPTION	ORGD.	CHED.	APRD.
E	09.01.15	TITLE CHANGED	AK	DVT	GS
D	24.10.14	DISPERSION PLATE ADDED	REE	REE	GS
C	16.07.14	FORMAT CHANGED AND SPANNING REVISED			GS
B	03.12.13	ORIGINAL ISSUE			

STRUCTURE

TITLE: INTERMEDIATE POLE 0° - 2°

DISTRIBUTION CONSTRN. STANDARD

western power

DRAWN: JRR | DATE: 24-03-2014 | DRG. No. H100

ORIGINATED: | SCALE: NTS

CHECKED: REE

APPROVED: GRANT STACY | REV. E | SHT.

SPANNING: OVERHEAD COVERED CONDUCTOR
- TERMINATION STRUCTURES TO SPACER 12m MINIMUM.
- SPACER INTERVAL 10m (MAX. 15m, MIN. 7m)

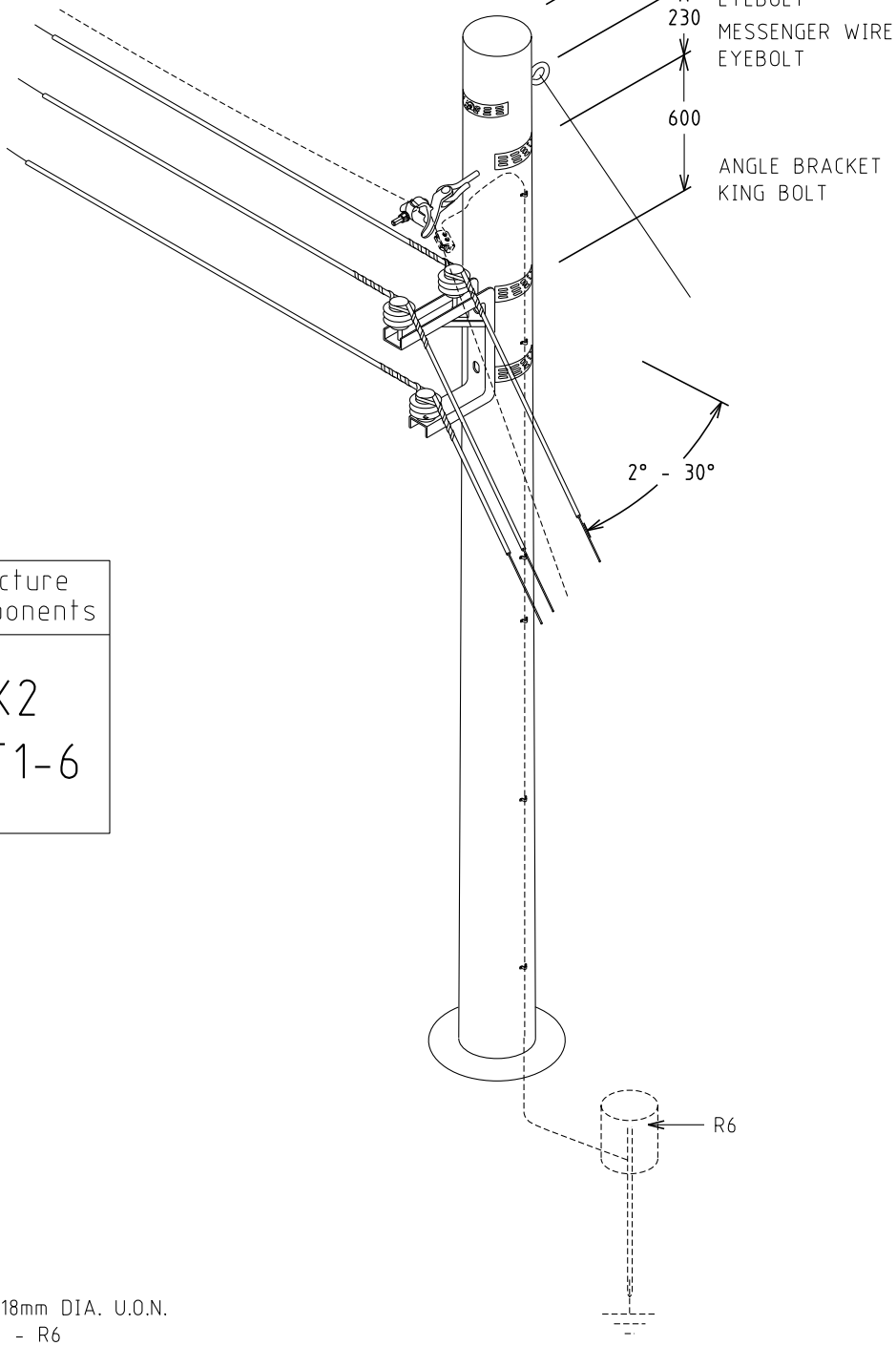

Structure Components

HX2
ST1-6

NOTE:
1. ALL HOLES 18mm DIA. U.O.N.
2. DOWNEARTH - R6
3. MAXIMUM DISTANCE BETWEEN DOWNEARTHS 150 METRES

R. No.	DATE	DESCRIPTION	ORGD.	CHED.	APRD.
D	09.01.15	TITLE REVISED	AK	DVT	GS
C	24.10.14	DISPERSION PLATE ADDED	REE	REE	GS
B	19.03.14	FORMAT CHANGED AND DISTANCE BETWEEN EYEBOLT & KING BOLT INCREASED TO 600			GS
A	22.12.11	ORIGINAL ISSUE			

STRUCTURE

TITLE

INTERMEDIATE ANGLE POLE 2° - 30°

DISTRIBUTION CONSTRN. STANDARD

westernpower

DRAWN: JRR DATE: 19-03-2014

ORIGINATED: SCALE: NTS

CHECKED: REE

APPROVED: GRANT STACY

DRG. No. H101

REV. D SHT.

SPANNING: OVERHEAD COVERED CONDUCTOR
- TERMINATION STRUCTURES TO SPACER 12m MINIMUM.
- SPACER INTERVAL 10m (MAX. 15m, MIN. 7m)

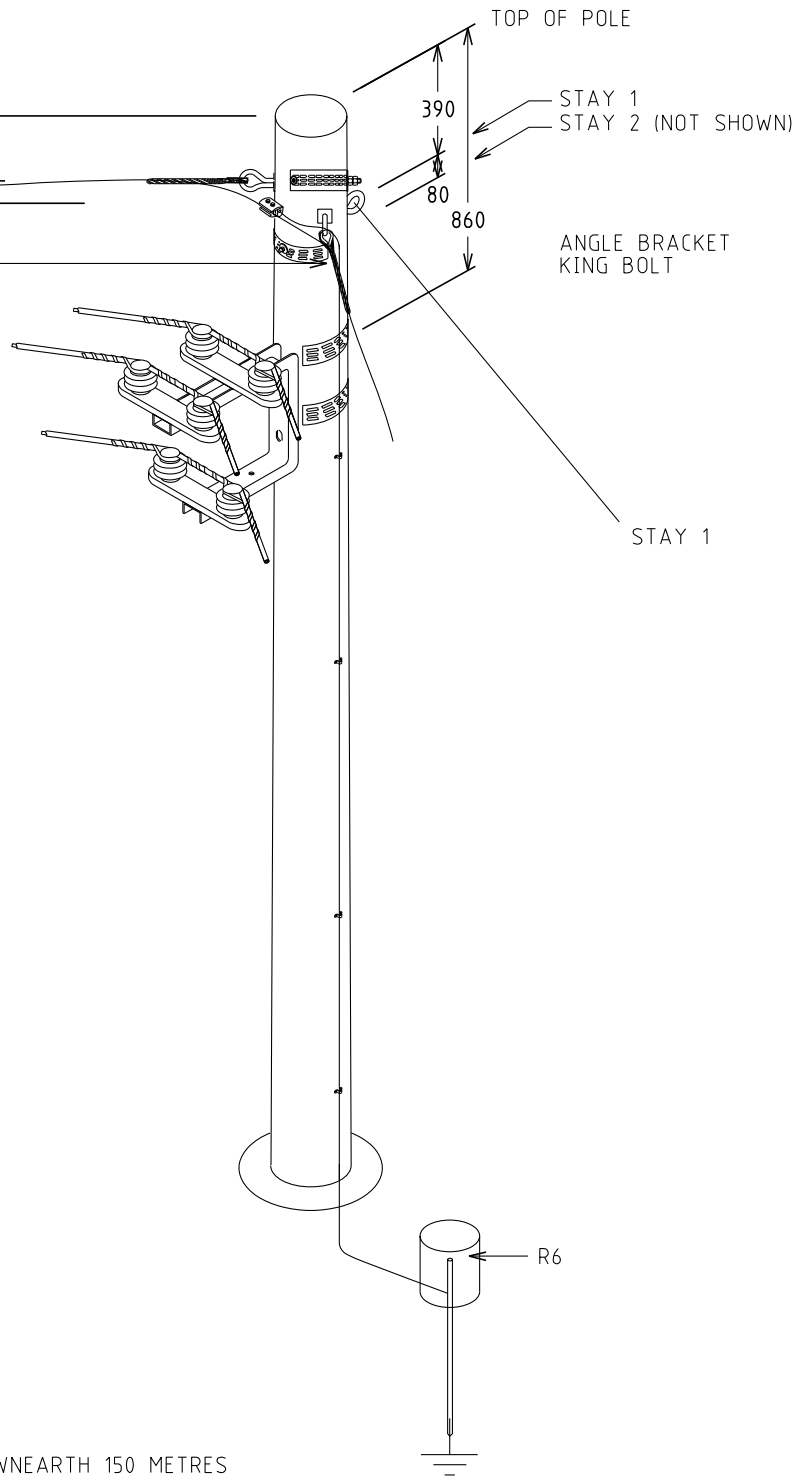

Structure Components

HX3
ST1-6

NOTE:
1. ALL HOLES 18 DIA. UON
2. DOWNEARTH - R6
3. MAXIMUM DISTANCE BETWEEN DOWNEARTH 150 METRES

R. No.	DATE	DESCRIPTION	ORGD.	CHED.	APRD.
C	27.10.14	DISPERSION PLATE ADDED	REE	REE	GS
B	16.07.14	FORMAT CHANGED AND SPANNING REVISED			GS
A	22.12.11	ORIGINAL ISSUE			

STRUCTURE

TITLE

INTERMEDIATE ANGLE POLE 31° - 60°

DISTRIBUTION CONSTRN. STANDARD

westernpower

DRAWN: JRR DATE: 24-03-2014

ORIGINATED: SCALE: NTS

CHECKED: REE

APPROVED: GRANT STACY

DRG. No. H102

REV. C SHT.

SPANNING: OVERHEAD COVERED CONDUCTOR
- TERMINATION STRUCTURES TO SPACER 12m MINIMUM.
- SPACER INTERVAL 10m (MAX. 15m, MIN. 7m)

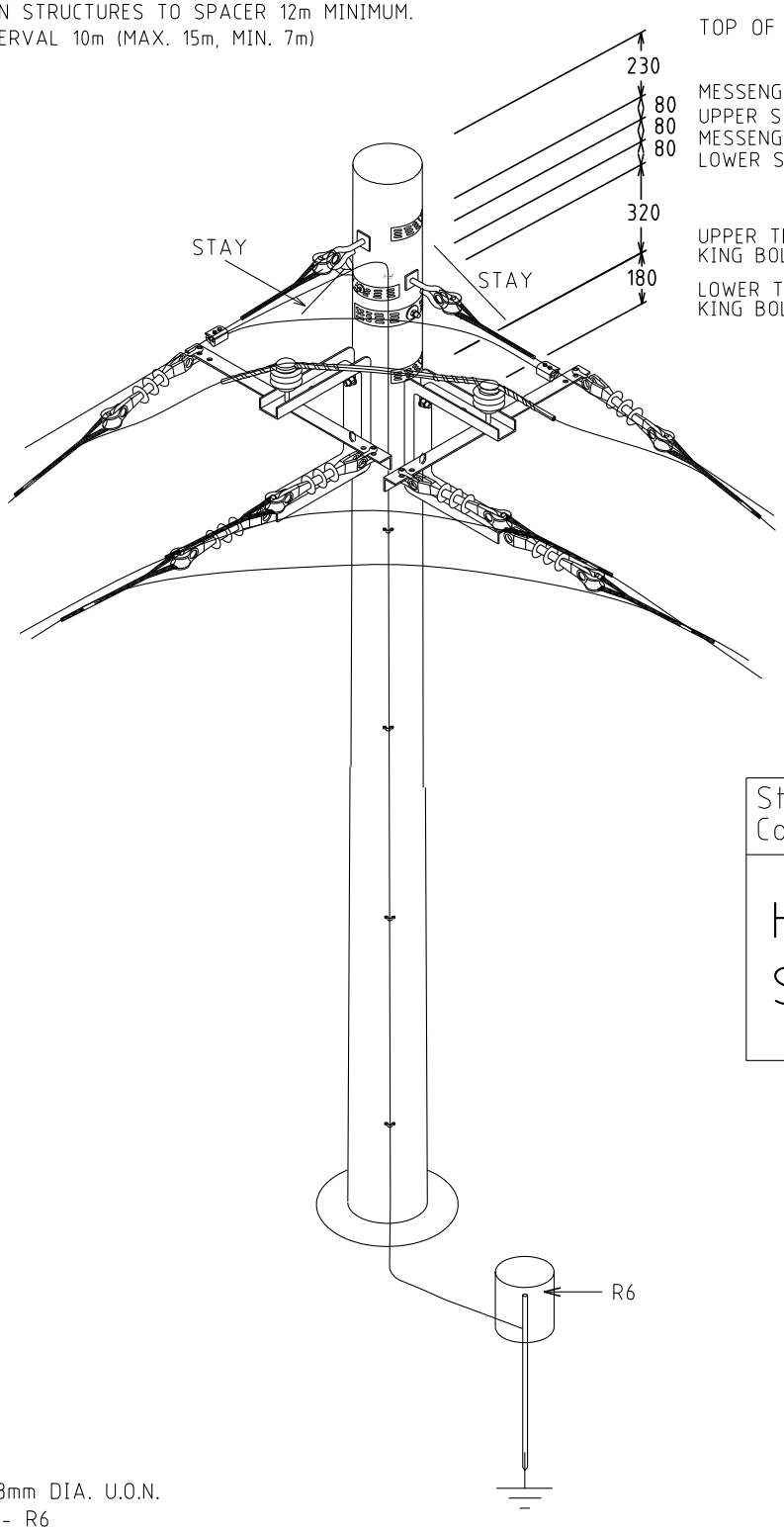

Structure Components

HX4
ST1-6

NOTE:
1. ALL HOLES 18mm DIA. U.O.N.
2. DOWNEARTH - R6
3. MAXIMUM DISTANCE BETWEEN DOWNEARTHS 150 METRES

R. No.	DATE	DESCRIPTION	ORGD.	CHED.	APRD.
D	27.10.14	DISPERSION PLATE ADDED	REE	REE	GS
C	16.07.14	FORMAT CHANGED AND SPANNING REVISED			GS
B	22.12.11	ORIGINAL ISSUE			

STRUCTURE

TITLE

DOUBLE TERMINATION 61° - 90°

DISTRIBUTION CONSTRN. STANDARD

DRAWN: JRR | DATE: 24-03-2014

ORIGINATED: | SCALE: NTS

CHECKED: REE

APPROVED: GRANT STACY

DRG. No. H103

REV. D | SHT.

SPANNING: OVERHEAD COVERED CONDUCTOR
- TERMINATION STRUCTURES TO SPACER 12m MINIMUM.
- SPACER INTERVAL 10m (MAX. 15m, MIN. 7m)

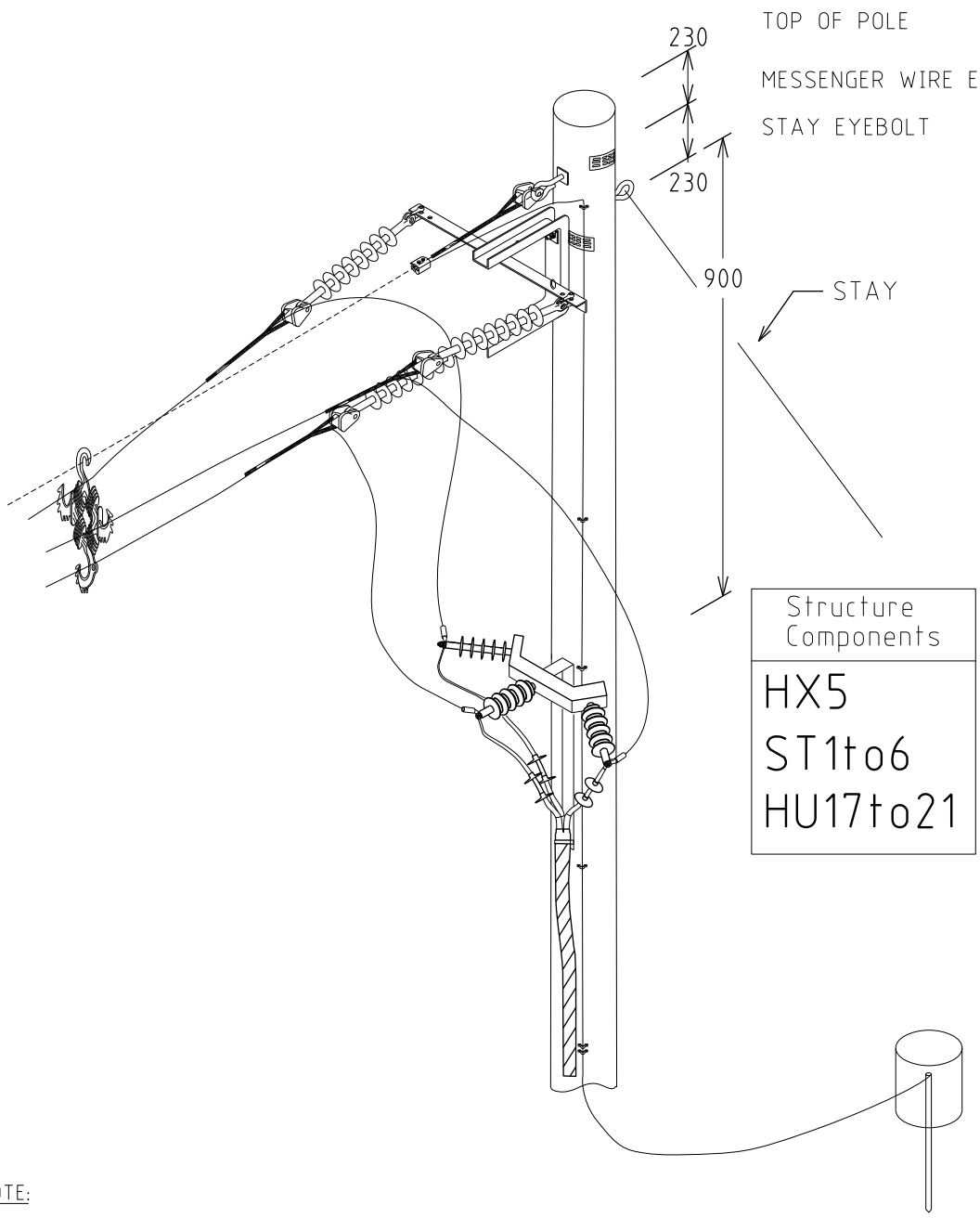

NOTE:

1. ALL HOLES 18mm DIA. U.O.N.
2. DOWNEARTH - R6
3. MAXIMUM DISTANCE BETWEEN DOWNEARTHS 150 METRES
4. WIDEN HOLE IN BRACKET FOR STAY EYE BOLT

REV. No.	DATE	DESCRIPTION	APPRD.
B	16.07.2014	FORMAT CHANGED AND DISPERSION PLATE ADDED	GS
A	03.02.2012	ORIGINAL ISSUE	

STRUCTURE

TITLE

TERMINATION POLE
FOR CABLE CONNECTION

DISTRIBUTION CONSTRUCTION STANDARDS

westernpower

DRAWN: JRR DATE: 24-03-2014
CHECKED: REE SCALE: NTS
APPROVED: GRANT STACY DATE: 24-03-2014

DRG. No. H104
REV. B SHT.

SPANNING: OVERHEAD COVERED CONDUCTOR
- TERMINATION STRUCTURES TO SPACER 12m MINIMUM.
- SPACER INTERVAL 10m (MAX. 15m, MIN. 7m)

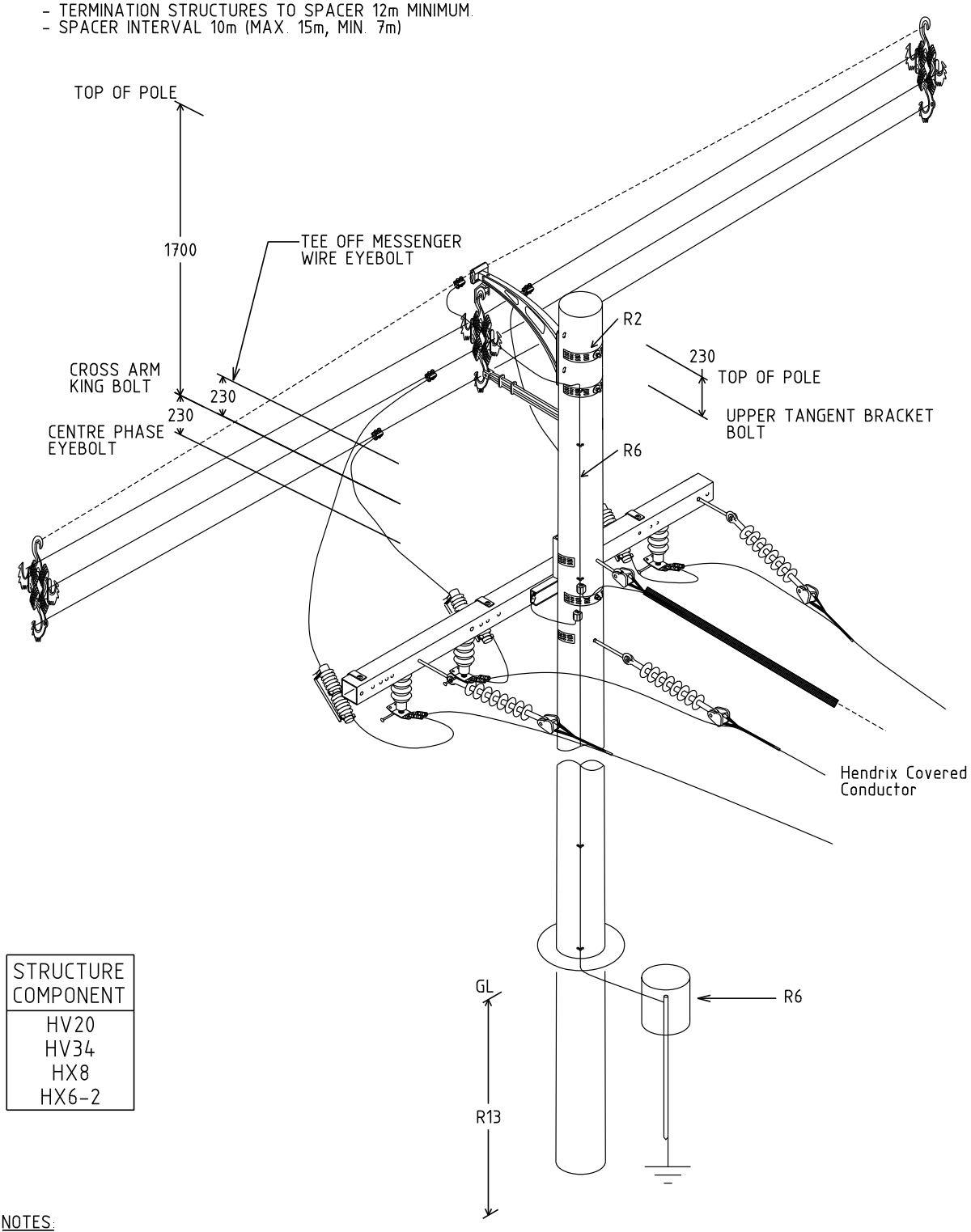

STRUCTURE COMPONENT
HV20
HV34
HX8
HX6-2

NOTES:
1. ALL HOLES 18mm DIA. U.O.N.
2. DOWNEARTH - R6
3. MAXIMUM DISTANCE BETWEEN DOWNEARTHS 150 METRES

REV.	DATE	DESCRIPTION	ORGD.	CHKD.	APRD.
D	14.05.26	POLE TOP EARTHING ADDED	NG	NMc	CO
C	16.07.14	FORMAT CHANGED AND DISPERSION PLATE ADDED			GS
B	18.05.12	ORIGINAL ISSUE			

STRUCTURE

TITLE: INTERMEDIATE TEE OFF FROM EXISTING COVERED CONDUCTOR WITH DOF DRILLING DETAILS

DISTRIBUTION CONSTRN. STANDARD

westernpower

DRAWN: JRR | DATE: 24-03-2014 | DRG. No. H105

ORIGINATED: | SCALE: NTS

CHECKED: REE

APPROVED: GRANT STACY | REV. D | SHT. 1/1

SPANNING: OVERHEAD COVERED CONDUCTOR
- TERMINATION STRUCTURES TO SPACER 12m MINIMUM.
- SPACER INTERVAL 10m (MAX. 15m, MIN. 7m)

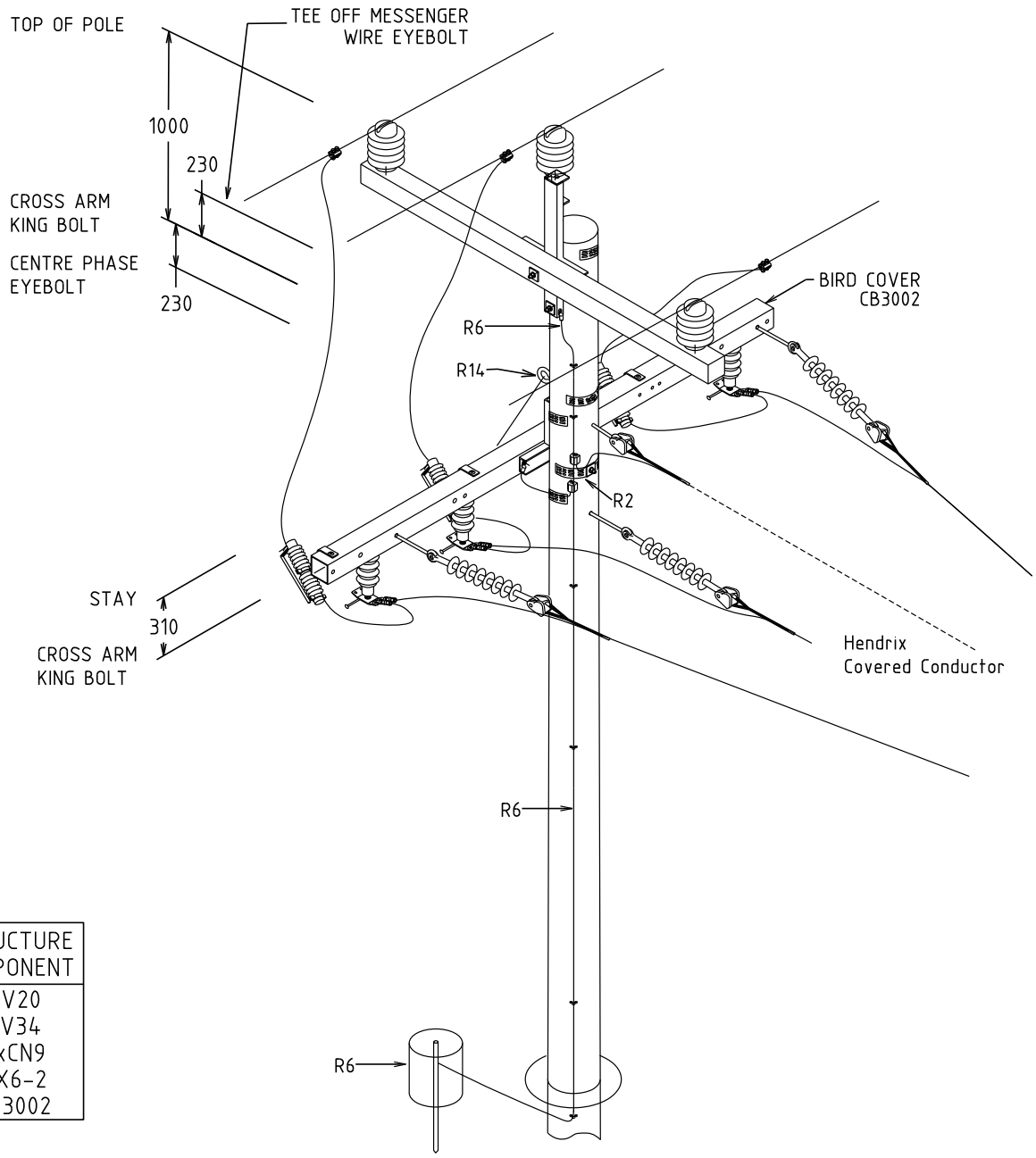

STRUCTURE COMPONENT
HV20
HV34
3xCN9
HX6-2
CB3002

NOTES:
1. ALL HOLES 18Φ. U.O.N.
2. MAXIMUM DISTANCE BETWEEN DOWNEARTHS 150 METRES

REV.	DATE	DESCRIPTION	ORGD.	CHKD.	APRD.
E	14.05.26	POLE TOP EARTHING ADDED. STAY WIRE ADDED	NG	NMc	CO
D	16.01.15	BIRD COVER ADDED	JC	REE	GS
C	16.07.14	FORMAT CHANGED AND DISPERSION PLATE ADDED			GS
B	03.08.11	ORIGINAL ISSUE			

STRUCTURE

TITLE: INTERMEDIATE TEE OFF FROM EXISTING BARE CONDUCTOR WITH D.O.F

DISTRIBUTION CONSTRN. STANDARD

westernpower

DRAWN: JRR | DATE: 24-03-2014 | DRG. No. H106
ORIGINATED: | SCALE: NTS
CHECKED: AK
APPROVED: GRANT STACY | REV. E | SHT. 1/1

SPANNING: OVERHEAD COVERED CONDUCTOR
- TERMINATION STRUCTURES TO SPACER 12m MINIMUM.
- SPACER INTERVAL 10m (MAX. 15m, MIN. 7m)

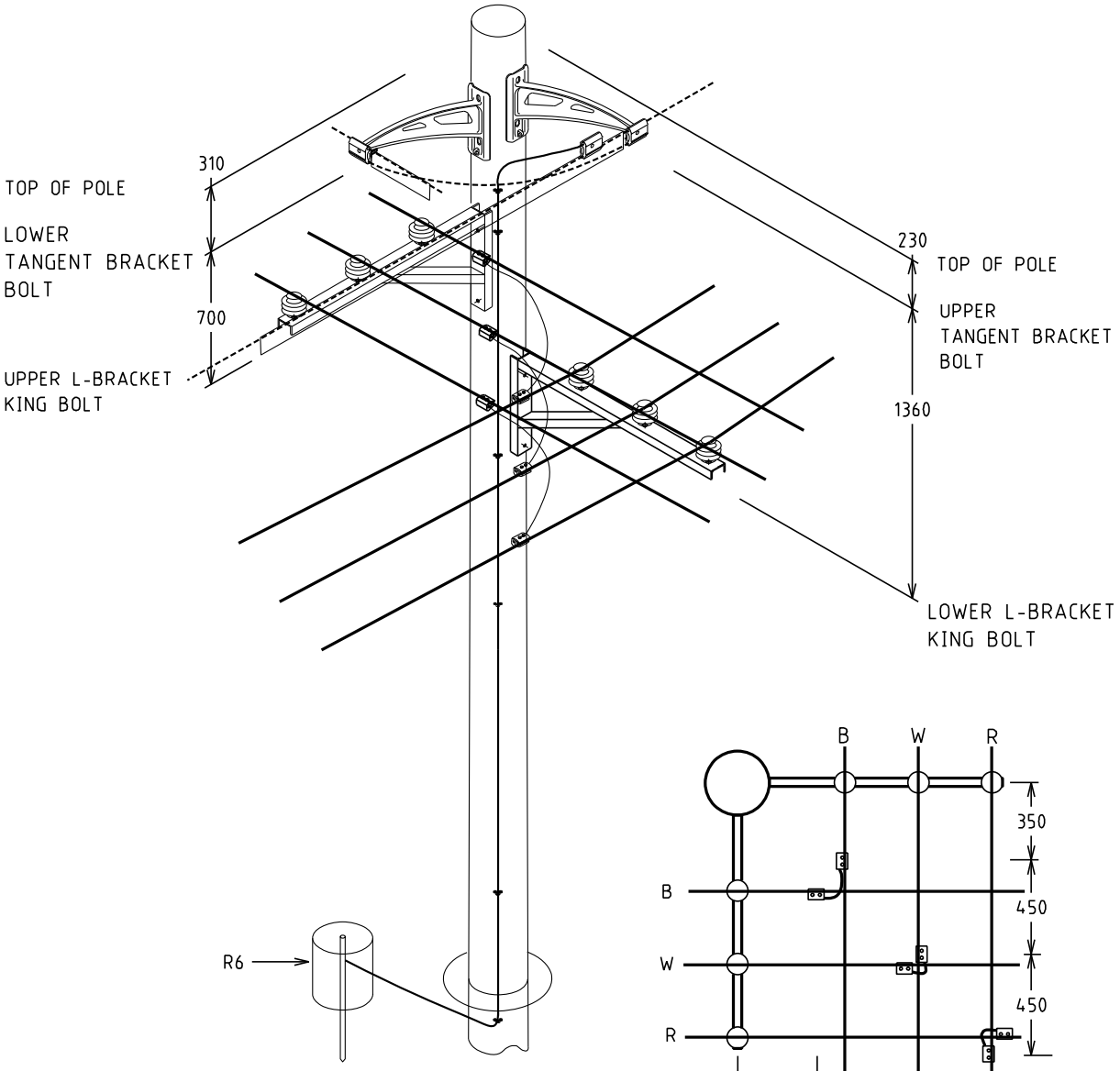

TOP VIEW
CONNECTION DISPLAY

NOTE:
1. ALL DIMENSIONS ARE IN MILLIMETRES.
2. ALL HOLES 18mm DIA. U.O.N.
3. MAXIMUM DISTANCE BETWEEN DOWNEARTHS 150m

REV	DATE	DESCRIPTION	ORGD.	CHKD.	APRD.
D	19.12.17	DISPERSION PLATE REMOVED AND EARTHING MODIFIED	NMc	CO	GS
C	27.10.14	DISPERSION PLATE ADDED	REE	REE	GS
B	16.07.14	FORMAT CHANGED AND SPANNING CHANGED			GS
A	22.12.11	ORIGINAL ISSUE			

STRUCTURE

TITLE
INTERMEDIATE POLE CROSSING

DISTRIBUTION CONSTRN. STANDARD
westernpower

DRAWN: JRR DATE: 24-03-2014
ORIGINATED: SCALE: NTS
CHECKED: REE
APPROVED: GRANT STACY

DRG. No. H107
REV. D SHT.

SPANNING: OVERHEAD COVERED CONDUCTOR
- TERMINATION STRUCTURES TO SPACER 12m MINIMUM.
- SPACER INTERVAL 10m (MAX. 15m, MIN. 7m)

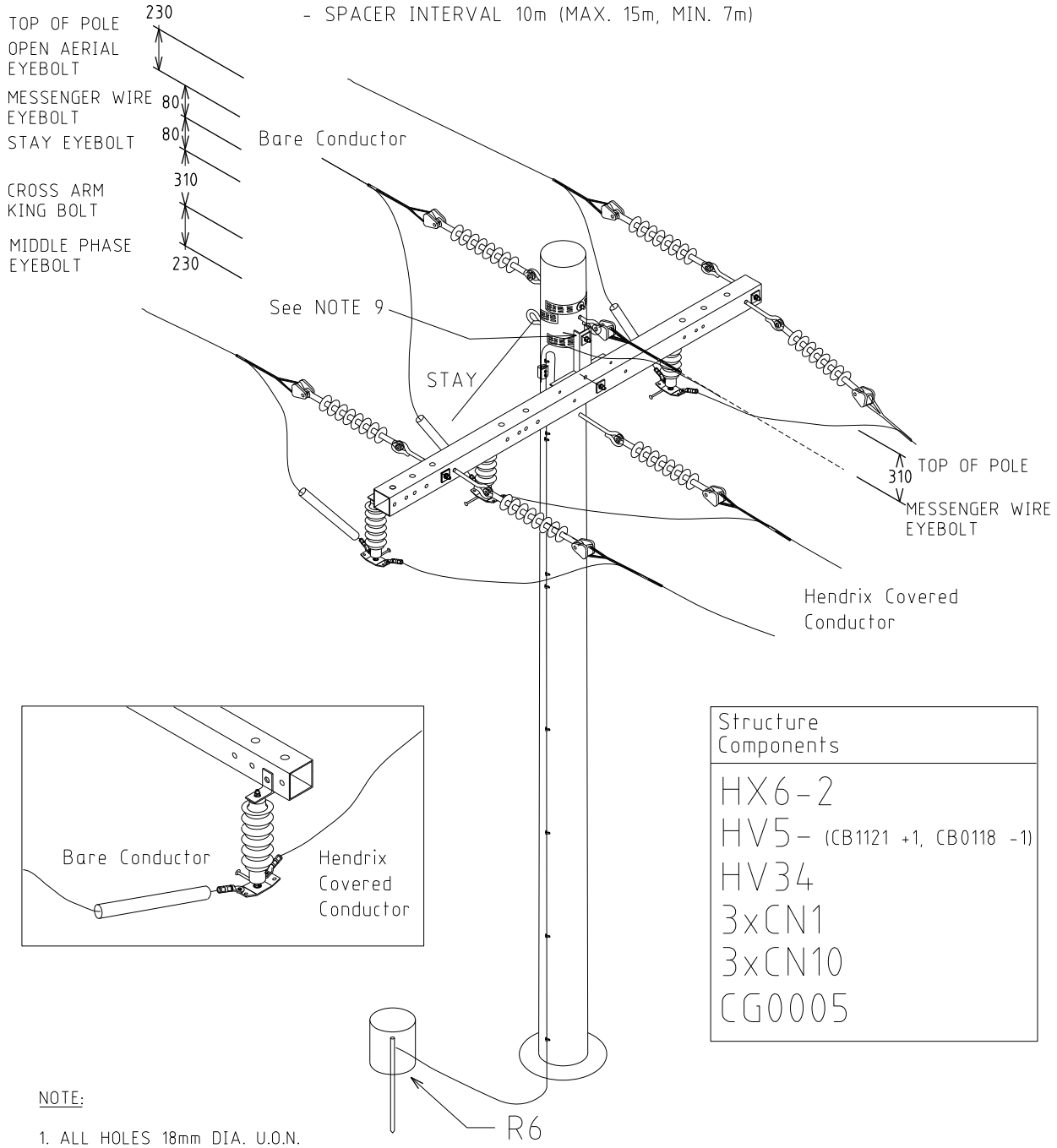

Structure Components
HX6-2
HV5 – (CB1121 +1, CB0118 -1)
HV34
3xCN1
3xCN10
CG0005

NOTE:

1. ALL HOLES 18mm DIA. U.O.N.
2. DOWNEARTH - R6
3. MAXIMUM DISTANCE BETWEEN DOWNEARTHS 150 METRES
4. DOWN EARTH CONNECTED DIRECTLY TO CROSS ARM
5. MESSENGER WIRE CONNECTED TO DOWN EARTH
6. OUTER PARKING BARS ON S.A's TO FACE INWARDS
7. S.A. SHEDS FACING DOWNWARDS
8. CUT 400mm CONDUIT TO COVER BARE TAPS, SEE INSET
9. HOLE IN CROSS ARM T-BRACKET TO BE WIDENED TO 22mm DIA. AND COLD GALVANISED TO FIT STAY EYEBOLT

REV. No.	DATE	DESCRIPTION	APPRD.
B	16.07.2014	FORMAT CHANGED AND DISPERSION PLATE ADDED	GS
A	03.08.2011	ORIGINAL ISSUE	

STRUCTURE

TITLE: OPEN AERIAL TO COVERED CONDUCTOR WITH SURGE ARRESTERS

DISTRIBUTION CONSTRUCTION STANDARDS

westernpower

DRAWN: JRR DATE: 24-03-2014
CHECKED: REE SCALE: NTS
APPROVED: GRANT STACY DATE: 24-03-2014

DRG. No. H108-1
REV. B SHT.

SPANNING: OVERHEAD COVERED CONDUCTOR
- TERMINATION STRUCTURES TO SPACER 12m MINIMUM.
- SPACER INTERVAL 10m (MAX. 15m, MIN. 7m)

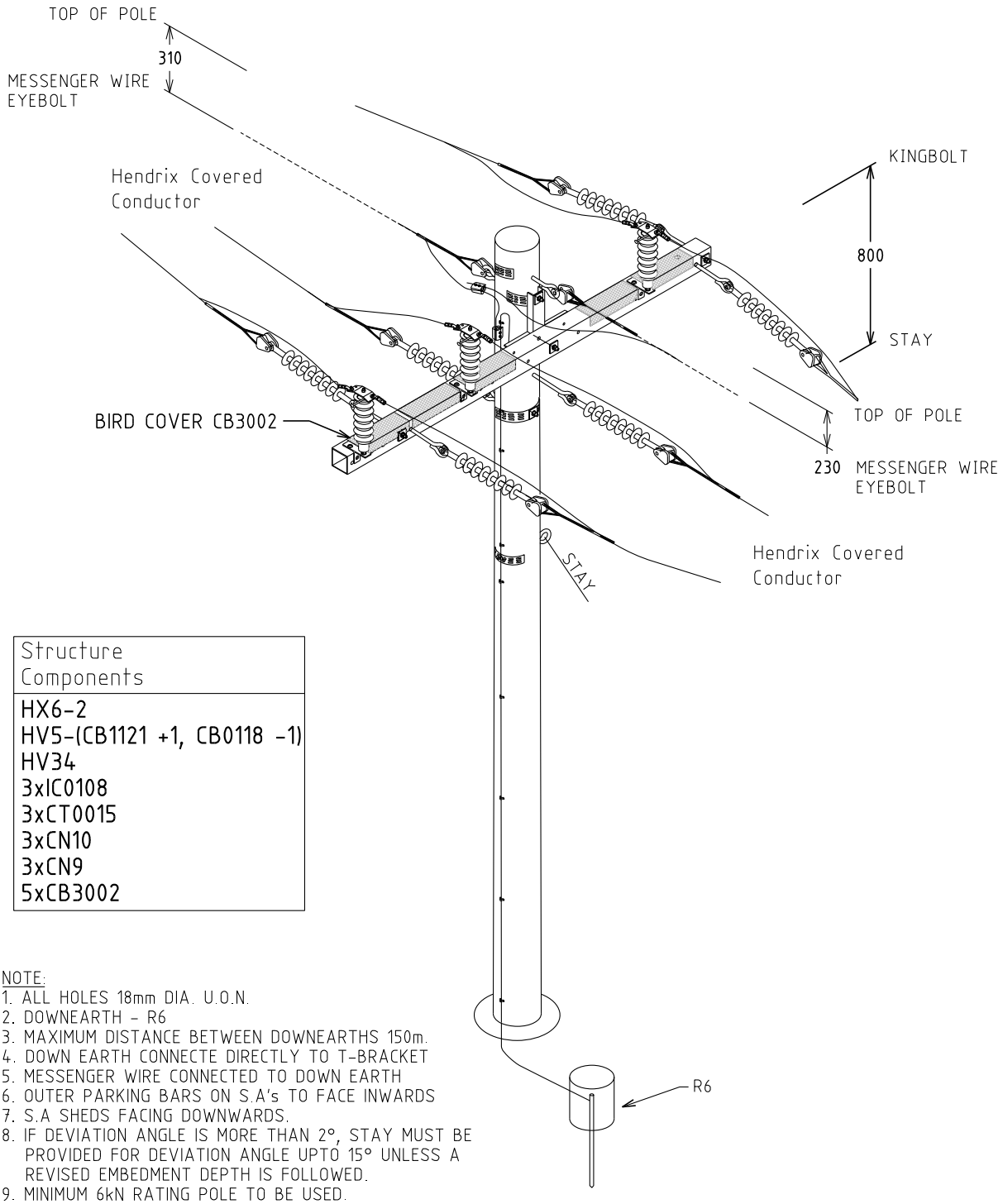

Structure Components
HX6-2
HV5-(CB1121 +1, CB0118 -1)
HV34
3xIC0108
3xCT0015
3xCN10
3xCN9
5xCB3002

NOTE:
1. ALL HOLES 18mm DIA. U.O.N.
2. DOWNEARTH - R6
3. MAXIMUM DISTANCE BETWEEN DOWNEARTHS 150m.
4. DOWN EARTH CONNECTE DIRECTLY TO T-BRACKET
5. MESSENGER WIRE CONNECTED TO DOWN EARTH
6. OUTER PARKING BARS ON S.A's TO FACE INWARDS
7. S.A SHEDS FACING DOWNWARDS.
8. IF DEVIATION ANGLE IS MORE THAN 2°, STAY MUST BE PROVIDED FOR DEVIATION ANGLE UPTO 15° UNLESS A REVISED EMBEDMENT DEPTH IS FOLLOWED.
9. MINIMUM 6kN RATING POLE TO BE USED.

R. No.	DATE	DESCRIPTION	ORGD.	CHED.	APRD.
C	16.01.15	TITLE CHANGED, DRAWING REVISED & NOTES 8 & 9 ADDED	AK	JC	GS
B	16.07.14	FORMAT CHANGED AND SPANNING CHANGED			GS
A	03.08.11	ORIGINAL ISSUE			

STRUCTURE

TITLE: STRAIN COVERED CONDUCTOR WITH SURGE ARRESTERS

DISTRIBUTION CONSTRN. STANDARD

westernpower

DRAWN: JRR | DATE: 24-03-2014 | DRG. No. H108-2

ORIGINATED: | SCALE: NTS

CHECKED: AK

APPROVED: GRANT STACY | REV. C | SHT.

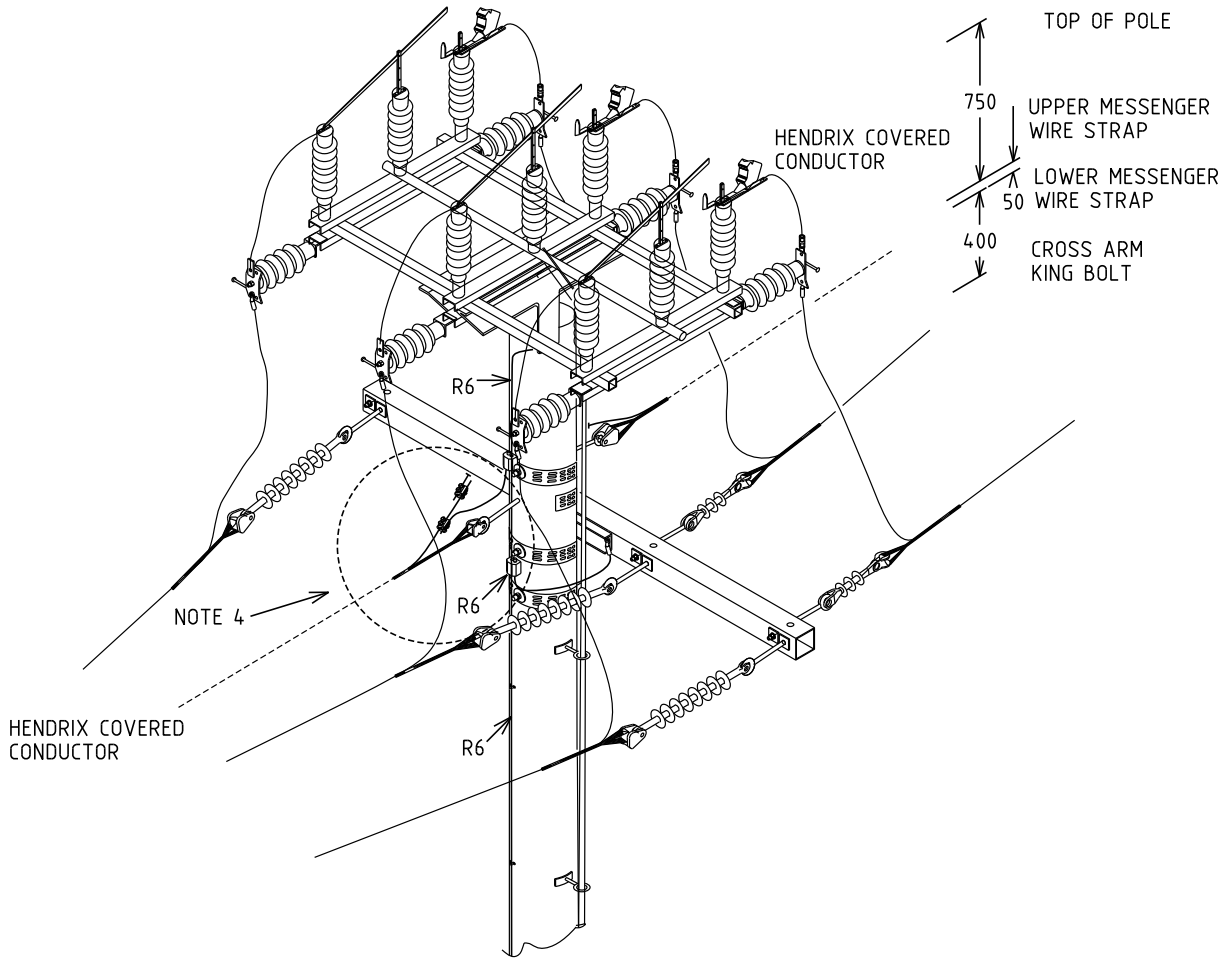

STRUCTURE COMPONENT
HV19 HX07

NOTES:
1. ALL DIMENSIONS ARE IN MILLIMETRES.
2. ALL HOLES 18Φ U.O.N.
3. MAXIMUM DISTANCE BETWEEN DOWNEARTHS 150m
4. TRAIN CENTRE PHASE CONDUCTOR TO MAINTAIN 400 CLEARANCE FROM MESSENGER WIRE.
5. REFER TO DWG. H12 FOR POLE TOP SWITCH AND MID POLE ACTUATOR INSTALLATION DETAILS.
6. TERMINATION STRUCTURES TO SPACER MAX. 15m, MIN. 12m.

REV.	DATE	DESCRIPTION	ORGD.	CHKD.	APRD.
E	14.05.26	POLE TOP EARTHING ADDED	NG	NMc	CO
D	24.09.19	TITLE CHANGED AND PTS UPDATED	REE	AN	GS
C	16.07.14	FORMAT CHANGED AND DISPERSION PLATE ADDED			GS
B	28.11.11	ORIGINAL ISSUE			

STRUCTURE

TITLE

PTS COVERED CONDUCTOR TERMINATED MESSENGER WIRE

DISTRIBUTION CONSTRN. STANDARD

westernpower

DRAWN: JRR | DATE: 24-03-2014 | DRG. No. H109

ORIGINATED: | SCALE: NTS

CHECKED: REE

APPROVED: GRANT STACY | REV. E | SHT. 1/1

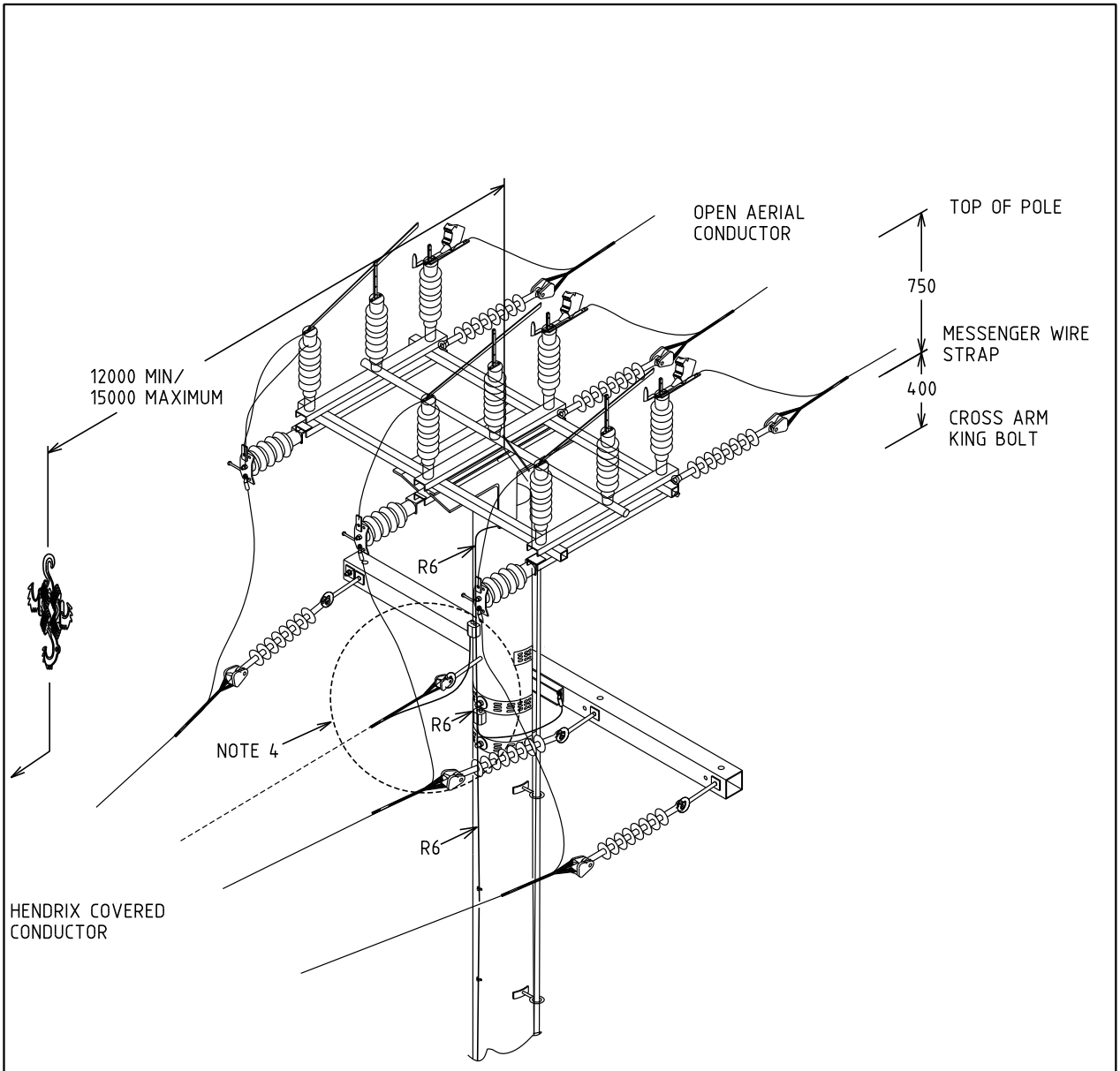

STRUCTURE COMPONENT
HV19 CN01 HX06-1

NOTES:
1. ALL DIMENSIONS ARE IN MILLIMETRES.
2. ALL HOLES 18Φ U.O.N.
3. MAXIMUM DISTANCE BETWEEN DOWNEARTHS 150m
4. TRAIN CENTRE PHASE CONDUCTOR TO MAINTAIN 400 CLEARANCE FROM MESSENGER WIRE.
5. REFER TO DWG. H12 FOR POLE TOP SWITCH AND MID POLE ACTUATOR INSTALLATION DETAILS.
6. TERMINATION STRUCTURES TO SPACER MAX. 15m, MIN. 12m.

REV.	DATE	DESCRIPTION	ORGD.	CHKD.	APRD.
E	14.05.26	POLE TOP EARTHING ADDED	NG	NMc	GS
D	24.09.19	TITLE CHANGED AND PTS UPDATED	REE	AN	GS
C	16.07.14	FORMAT CHANGED AND DISPERSION PLATE ADDED			GS
B	28.11.11	ORIGINAL ISSUE			

STRUCTURE

TITLE

PTS COVERED CONDUCTOR TO OPEN AERIAL

DISTRIBUTION CONSTRN. STANDARD

westernpower

DRAWN: JRR | DATE: 24-03-2014 | DRG. No. H110

ORIGINATED: | SCALE: NTS

CHECKED: REE

APPROVED: GRANT STACY | REV. E | SHT. 1/1

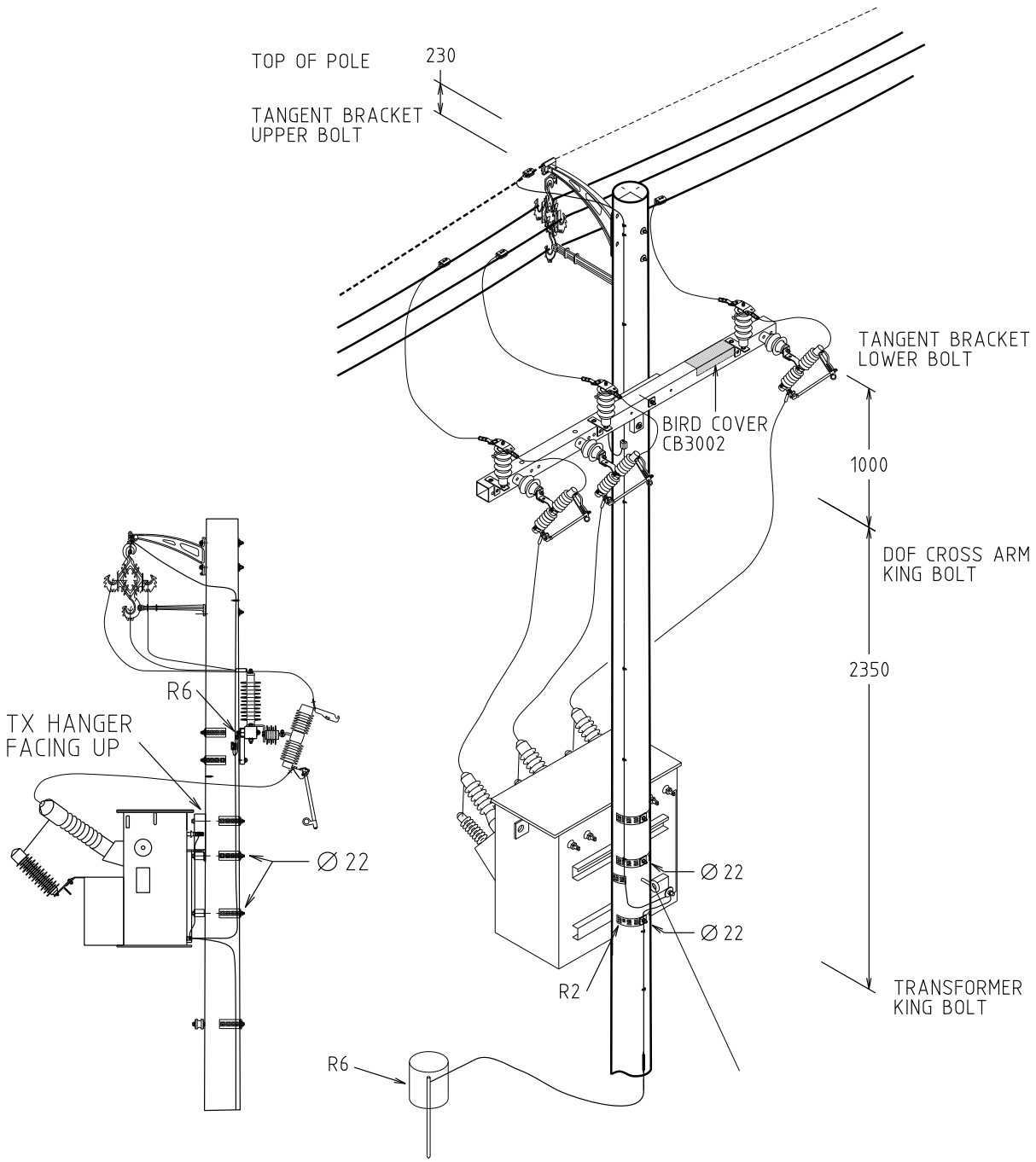

NOTES:
1. ALL DIMENSIONS ARE IN MILLIMETRES.
2. ALL HOLES 18mm DIA. U.O.N.
3. MAXIMUM DISTANCE BETWEEN DOWNEARTHS - 150m

REV.	DATE	DESCRIPTION	ORGD.	CHKD.	APRD.
G	10.12.25	POLE TOP EARTHING ADDED. R5 UPDATED	CO	KT	MM
F	16.11.18	EARTHING SYSTEM MODIFIED & Tx MODEL CHANGED	NMc	NN	GS
E	19.01.15	BIRD COVER ADDED	JC	REE	GS
D	16.07.14	FORMAT CHANGED AND DISPERSION PLATE ADDED			GS
C	21.05.12	ORIGINAL ISSUE			

STRUCTURE

TITLE: INTERMEDIATE TRANSFORMER COVERED CONDUCTOR

DISTRIBUTION CONSTRN. STANDARD

westernpower

DRAWN: JRR | DATE: 24-03-2014 | DRG. No. H111

ORIGINATED: | SCALE: NTS

CHECKED: REE

APPROVED: GRANT STACY | REV. G | SHT. 1/1

SPANNING: OVERHEAD COVERED CONDUCTOR
- TERMINATION STRUCTURES TO SPACER 12m MINIMUM.
- SPACER INTERVAL 10m (MAX. 15m, MIN. 7m)

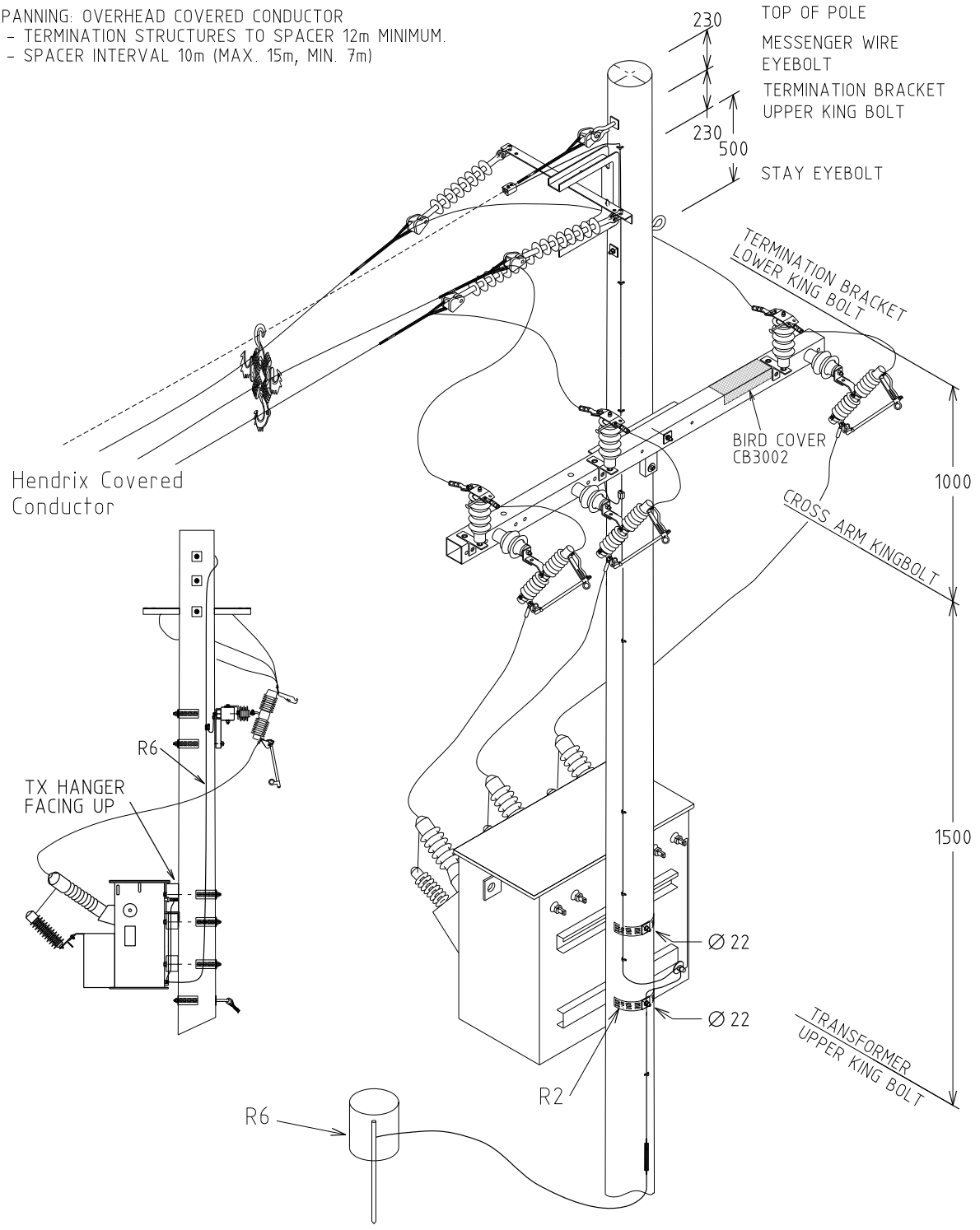

NOTES:
1. ALL DIMENSIONS ARE IN MILLIMETRES.
2. ALL HOLES 18Ø U.O.N.
3. MAXIMUM DISTANCE BETWEEN DOWNEARTHS 150m.

REV.	DATE	DESCRIPTION	ORGD.	CHKD.	APRD.
G	10.12.25	POLE TOP EARTHING ADDED	CO	KT	MM
F	16.11.18	EARTHING SYSTEM MODIFIED & Tx MODEL CHANGED	NMc	NN	GS
E	19.01.15	BIRD COVER ADDED	JC	REE	GS
D	17.06.14	FORMAT CHANGED AND CLARIFICATION OF DIMENSION			GS
C	21.05.12	ORIGINAL ISSUE			

STRUCTURE

TITLE: TERMINATION TRANSFORMER WITH DROP OUT FUSE

DISTRIBUTION CONSTRN. STANDARD

westernpower

DRAWN: JRR | DATE: 24-03-2014 | DRG. No. H112
ORIGINATED: | SCALE: NTS
CHECKED: REE
APPROVED: GRANT STACY | REV. G | SHT. 1/1